WEATHER FORECAST
Cloudy tonight and Tuesday. High Tuesday near 40. Low tonight near 30. Winds northeasterly 10-15 miles per hour.

THE GETTYSBURG TIMES

Truth Our Guide—The Public Good Our Aim ESTABLISHED 1902 *With Honor To Ourselves And Profit To Our Patrons*

GOOD EVENING
A man will go a long way to save his face, and a woman just to the corner drugstore.

Vol. 58, No. 9 | Leased Wire Member of The Associated Press | GETTYSBURG, PA., MONDAY EVENING, JANUARY 11, 1960 | Adams County's Only Daily Newspaper | PRICE FIVE CENTS

L. M. LUPP, 68, BIGLERVILLE, DIES SUNDAY

Lawrence M. "Jockey" Lupp, 68, a resident of Biglerville for the last 40 years, died Sunday morning at 10 o'clock at his home of a cerebral hemorrhage. He had been under a physician's care since suffering a heart attack two years ago.

A son of the late John and Virginia (Biesecker) Lupp, he had been employed by the Reading Railroad for many years, and had worked for the Adams County Fruit Packing and Distributing Co., Biglerville, for more than 20 years.

He was a member of the Biglerville Fire Co. and had served as its assistant chief for many years. He was also a member of the Adams County Firemen's Association, the Southeastern Pennsylvania Firemen's Association and the Gettysburg Eagles lodge.

Surviving are his wife, the former Belle Huff, whom he wed 42 years ago; a daughter Mrs. Roy Kuykendall, Biglerville; ten grandchildren; two great-grandchildren, two brothers Wilmer and Isaiah Lupp, both of Biglerville, and a sister, Mrs. Raymond Slaybaugh, Aspers R. 1.

Funeral services Wednesday afternoon at 2 o'clock from the Dugan Funeral Home, Bendersville, with the Rev. Nevin R. Franiz and the Rev. Laverne Rohrbaugh officiating. Interment in the Biglerville Cemetery. Friends may call at the funeral home in Bendersville Tuesday evening after 7 o'clock.

USMC PROGRAM AVAILABLE TO MEN AND COEDS

A Marine Corps Officer Selection Team will visit Gettysburg College Wednesday and Thursday to interview students who are interested in becoming officers in the United States Marine Corps.

Primarily, there are two programs: one for freshmen, sophomores and juniors: the other for seniors and recent graduates.

The first program, popularly known as PLC (Platoon Leaders Class) includes the following features:

(a) Remain in school with draft deferment.

(b) No on-campus meetings or drills — just two (2) six week summer courses at Quantico, Va.

(c) Pay while in summer training — and increased pay later as an officer, by reason of seniority.

(d) Commissioning on graduation day followed by three years of active duty.

10-Week School

Under the OCC program, for seniors and recent graduates, completion of a ten week Officer Candidate School at Quantico, Va., is followed by commissioning as a second lieutenant and three years of active duty.

In the case of aviators, the active duty obligation is approximately a year and a half longer because of flight training.

Those young men who are interested in joining the Marines are invited to confer with the Marine team.

On Wednesday Woman Marine Lieutenant Peggy L. Tiller, woman officer procurement representative from the 4th Marine Corps Reserve and Recruitment District with headquarters in Philadelphia, will visit the college to discuss the opportunities for college women to enter the service in an executive capacity.

Fractures Skull In Fall From Cycle

Paul L. Myers, 26, East Berlin R. 2, is reported in a satisfactory condition today at the Warner Hospital where he was admitted by ambulance Saturday evening following a fall from a bicycle.

He suffered a fractured skull and fractured nose. Myers reported that two dogs began snapping at him as he was riding his bicycle and caused him to fall.

TO HEAR DR. STOKES

Dr. Milton L. Stokes, chairman of the department of economics at Gettysburg College, will be the speaker for the weekly dinner meeting of the Gettysburg College, will be the speaker for the weekly dinner meeting of the Gettysburg Lions club this evening at 6 o'clock at the Shetter House. He will discuss economics with special attention to the steel industry.

LOCAL WEATHER

Saturday's high	41
Saturday night's low	24
Sunday's high	52
Last night's low	32
Today at 8:30 a.m.	39
Today at 1:45 p.m.	39

Mark Golden Wedding Day

Mr and Mrs. Harry E. Cluck, Gettysburg R. 3, who today mark their 50th wedding anniversary, were feted at a surprise anniversary party held for them by their children Sunday afternoon at the Cashtown Community building. More than 300 relatives and friends were present for the observance.

Wed January 11, 1910, at the First Lutheran Church at Hagerstown, Md., by the Rev. H. H. Thomas, Mr. and Mrs. Cluck moved to Highland Twp., Adams County, from Franklin County in 1913 and have resided in Highland Twp. since that time. They own and operate the farm where they reside. Besides farming, Mr. Cluck, who is now 75, has been connected with construction work, both carpentering and road building, for nearly 15 years. He is a supervisor in Highland Twp.

Mrs. Cluck is the former Maude R. Sowers of Orrtanna.

The couple has three sons: Kermit L. Cluck, Gettysburg; H. Wayne Cluck, Gettysburg R. 3, and J. Rodney Cluck, Rock Falls, Ill.; two daughters, Mrs. Eleanor Wolf, Gettysburg, and Mrs. Lois Heyser, McKnightstown; 16 grandchildren and five great-grandchildren.

The couple, both of whom are enjoying good health, received numerous gifts for their anniversary.

Churchmen To Meet In St. James Church

The annual meeting of the Adams County Council of Churches, scheduled for 7:30 o'clock Thursday evening, will be held in St. James Lutheran Church here. In an announcement of the meeting Saturday the place was given incorrectly as the Church of the Brethren. Election of officers and an address by Attorney Horace G. Ports, York, president of the state Council of Churches, are on the program.

Birth Announcements

At Warner Hospital

Mr and Mrs. Carroll Haines, Westminster R. 1, daughter, today.

Mr. and Mrs. James Henry 317 York St., daughter, today.

Mr. and Mrs. Allen C. Witherow, R. 4, daughter, Sunday.

Mr. and Mrs. Donald L Gochenour, Emmitsburg, son, Sunday.

Mr and Mrs. John D. Axe, 129 Chambersburg St., son, Sunday.

Mr. and Mrs Albert Kuhn, Littlestown, daughter, Saturday.

At Hanover Hospital

Mr. and Mrs. Leo Todt, Littlestown R. 2, son, Friday.

Mr. and Mrs Robert J. Powers Jr., East Berlin R. 2, son, Friday.

Mr and Mrs H A Milley, Florham Park, N. J., announce the birth of a baby daughter, January 6. Mrs. Milley is the former Elaine Kessel, daughter of Mr. and Mrs. Earl Kessel, R. 4

DRIVERS FORFEIT FINES

Among those forfeiting fines recently in Westminster for motor code violations were: Milford J Gibson, Taneytown, $11.45, exceeding 30 miles; Roy H. Little, Emmitsburg, $6.45, exceeding 30; Carl B. Haines, Taneytown, $11.45 failure to keep to the right of center of the road; Frank J. Webb, Emmitsburg, $11.45, stopped near crest of hill with no lights after dark. John R. Speak, Taneytown, $6.45, exceeding 30.

RITES FOR MISS SCOTT

Funeral services for Miss Mary Agnes Scott, 65, of 136 York St., who died Saturday morning at the Warner Hospital, were held this morning at 11 o'clock at the Peters Funeral Home, Carlisle St., with her pastor, Rev. Dr. Howard S. Fox, officiating. Interment in Evergreen Cemetery. Pallbearers were Paul Rohrbaugh, Luther Lawver, C. Stanley Hartman, John Hartman, Robert Weikert and Carl Menchey.

GETS PROMOTION

Pvt. Clarence E. Bagot has been promoted to Private First Class. He is serving with the U.S Army stationed in Korea. He is the grandson of Mrs. Ruth Bagot, 224 W. Middle St. His address is PFC. Clarence E. Bagot, RA 13675370, Co. A 321st ASA Br., APO 24, San Francisco, Calif.

MRS. RANG, 52, DIES SUDDENLY

Mrs. Violet A. Rang, 52, wife of James D. Rang, Littlestown R. 2, died this morning at 9:30 o'clock in Littlestown while she was in the Littlestown ambulance to begin the trip to the Warner Hospital here. Mrs. Rang had been very ill for some time.

She was a daughter of the late Samuel and Alice (Small) Kuhn and was a member of the St. Aloysius Catholic Church at Littlestown.

Surviving are her husband, three children: James D. Jr., Littlestown; Mrs. William Boone, Westminster R. D., and Miss Theresa Louise, at home. There are two grandchildren.

These brothers and sisters also survive: Mrs. Queen Huff, Miss Pearl Kuhn and Martin Kuhn, all of Hanover; Mrs. Thelma Markle, New Oxford; Bud Kuhn, Mont Alto; Miss Nettie Kuhn, Houston, Tex., and Clark and Edward Kuhn, both of Hanover.

Funeral services Thursday morning, meeting at the Little Funeral Home at 8:30 o'clock with a requiem high mass at 9 o'clock in St. Aloysius Church with the pastor, the Rev. Fr. William A. Boyle officiating. Interment in the St. Aloysius Cemetery.

Friends may call at the funeral home Wednesday evening where prayers will be said at 8 o'clock.

Engagements

Brenner—Altland

Mr. and Mrs. Melvin Altland, East Berlin R. 2, announce the engagement of their daughter, Mary Elizabeth, to Jay M. Brenner, son of Mr. and Mrs. Maurice Brenner, Mt. Wolf R. 1.

Miss Altland is a 1957 graduate of East Berlin High School. Brenner is a graduate of Manchester High School. Both are employed at York Shipley Inc.

Wineberg—Smith

The engagement of Miss Janet Elizabeth Smith, daughter of Mrs. H. Walter Smith, New Oxford R. 1, and the late H. W. Smith, to Pvt. Max Robert Wineberg Jr., son of Mr. and Mrs. M. R. Wineberg, New Oxford R. 2, is announced by her mother.

Byers—Sebright

The engagement of Shirley Catherine Sebright to Kenneth E. Byers, son of Mr. and Mrs. Samuel Byers, Chambersburg, is announced by the parents of the prospective bride. Mr. and Mrs. David Sebright, New Oxford.

Miss Sebright is a senior at Shippensburg State Teachers College and her fiance, a graduate of that college, is on the high school faculty at Mt. Union. The couple plan to marry before the end of summer.

(Continued On Page 2)

1909 CLASS GIVES $5,000 TO COLLEGE

A golden jubilee anniversary gift of $5,000 has been formally presented to Gettysburg College by the class of 1909, according to an announcement today by President Willard S Paul. The amount was pledged on Alumni Day last June 6.

Interest from the fund is to be given as an award for distinguished attainment to a student in chemistry.

Dr. Clarence L. S. Raby, Philadelphia, class president, Dr. Charles L. Kopp, Cumberland, Md., treasurer, and S. F. Snyder, Gettysburg Alumni Council representative, made the presentation at a ceremony Saturday in President Paul's office. General Paul thanked the class for its donation and acknowledged the service it will render the Gettysburg College chemistry department. Dr. John B. Zinn, Gettysburg retired chairman of the department and a member of the class of 1909, served on the college faculty for thirty-five years.

Plan Annual Award

Dr. Raby, a retired college development officer, called the 1909 class gift "a challenge to all fifty-year reunion classes of the future."

In presenting the check the following statement was made:

"President Paul, the class of 1909 on the fiftieth anniversary of its graduation from Gettysburg College presents to the College, through you, its fund of $5,000 to become a part of the permanent endowment fund of the College. The income from this fund shall be used for awards in the department of chemistry in accord with specifications to be prescribed by the class."

The award will be made after each academic year to the sophpomore majoring in chemistry who has shown greatest improvement.

JUVENILES FACE THEFT CHARGES

Four juvenile boys, ranging in age from 12 to 15, were charged over the weekend by state police with breaking into the part-time home of Ray B. Johnson, York Springs R. 1, and stealing articles valued at $41.20.

According to the petition filed by the officers with the juvenile court, the youths, who are in the custody of their parents, removed a rear kitchen window at the Johnson farm house some time between November 8 and December 11 and entered the building. Johnson, a resident of Pittsburgh, visits the farmhouse from-time-to-time.

From the house, police allege, the youths removed a .22 caliber rifle valued at $20, two hatchets valued at $8, stainless steel knives and forks worth $3, two boxes of shotgun shells worth $6, a case of soft drinks valued at $1.20 and 20 12-ounce bottles of beer worth $3.

Police said they had recovered the rifle and silverware from the youths.

CLUB TO MEET

The Adams County Baby Beef Club will meet January 20 at 8 p.m. at the Adams Electric Cooperative, rear of N. Stratton St., Assistant County Agent Duane G Duncan has announced.

MARRIAGE LICENSE

A marriage license has been issued at the office of the clerk of courts to Gary A. Orndorff, Hanover and Jean E. Harman, McSherrystown.

Fifty-Year Class Makes Donation

General Willard S. Paul, left, president of Gettysburg College, is shown receiving a check for $5,000 from the class of 1909 at a brief ceremony in his office Saturday morning. Others in the photograph are, left to right: Dr. Clarence L. S Raby, Philadelphia; S. F. Snyder, Gettysburg, and Dr. Charles L. Kopp, Cumberland, Md.

Catholic Church Bequeathed $2,000

Under the will of the late Stanislaus E. Krichten, McSherrystown probated in the office of the register and recorder $2,000 in insurance has been bequeathed to the church of the Annunciation of the Blessed Virgin Mary, McSherrystown, for parish needs and services. The remainder of the estate, valued at $5,000 plus real estate valued at $10,000, has been bequeathed to Bernadette and Violet Weaver, sisters-in-law; Della Poist, Gertrude Sneeringer, Myrtle Bohn, Hilda Eline and Bernadette Krichten, sisters.

F. Joseph Sneeringer, a nephew of the deceased, has been named executor of the estate.

Hospital Report

Admissions: Thomas L. Bushman, Emmitsburg R. 2, Mr. and Mrs. Luther Lobaugh, Bendersville; Mrs. Carroll Haines Westminster R. 1; Howard Orner, Bendersville; Mrs. James Reaver, R. 2; Mrs James Henry, 317 York St.; Mrs. Glenn Laughman, Hanover R. 5, Mrs. Earl Sheely, Emmitsburg R. 2; Mrs. Allen C. Witherow, R. 4; Mrs. Donald L Gochenour, Emmitsburg; Roger F. Leppo, Taneytown R. 1; Mrs David A. Sanders, Fairfield R. 1; Mrs John Axe, 129 Chambersburg St., Gervaise Eck, Littlestown, Littlestown R. 2, Mrs. William Hawn, Littlestown; David H Bowerson, 261 Baltimore St.; Mrs Fred Blocher, Littlestown, Mrs. Albert Kuhn, Littlestown, Paul L. Myers, East Berlin R. 2, Frank Machacek, Fairfield R. 1.

Discharges: Infant twins, a son and a daughter, of Mr and Mrs. Howard E. Lewis, Thurmont; Mrs Mary Shultz, R. 5; Lawrence Kane, Orrtanna R. 1; Fred Raffensberger, Biglerville R. 2, Howard Goldman, 525 York St.; Mrs Kemp Wallen and infant daughter, York Springs R. 2; Denton Miller, New Oxford R. 2; James Stonesifer, Westminster R. 2; Catherine Byrd, Taneytown, Mrs. William Tully, Fairfield R. 1; Mrs Jesse Glacken, Ladiesburg, Md.; Wilbur Bollinger, New Windsor, Md.; Mrs. Robert Gillelan and infant son, Biglerville; Mrs. Francis Bowling, 318 Barlow St.; Glenn Naugle, R. 4; Walter Angeli, 224 E. Middle St.; Mrs. Frederick Ahrens, 537 Carlisle St.; Mrs Leroy Wantz, Littlestown.

Detoured Passenger Train Hurtles Off Rails At 80 Miles An Hour; 4 Killed

By ROBERT L. SHAFFER

WELLINGTON, Ohio (AP) — A 10-car New York Central train, being detoured around a waiting freight, hurtled off its rails at 80 miles an hour here Sunday night. At least four persons were killed and more than 50 were hurt.

About 155 passengers — some headed as far east as New York City—were aboard the St. Louis-to-Cleveland Southwest Limited when it was wrecked in this village of 3,000 about 37 miles southwest of Cleveland.

There was an unconfirmed report there may have been a brake failure.

Flatten Signal Tower

The train's three-diesel power unit flattened an unoccupied signal tower at the track intersection. Then the train crumpled.

Leaking diesel fuel caught fire almost immediately and the smoke mingled with the mist and the flame in a frightening scene.

W. B. Salter of Indianapolis, general manager of the southern district of the New York Central, told newsmen it appears from speedometer tapes that the train was moving about 80 m.p.h. when it left the tracks.

Salter also said it is his understanding the limited was moving across a crossover near the Nickle Plate intersection when it derailed. He said the passenger train was being routed around a freight train ahead of it.

Two cars took the brunt of the smashup. One was a combination baggage-passenger coach which spun sideways across the tracks and was smashed broadside by the coach which followed it. Most of the dead and seriously injured were removed from these two cars.

Coroner Paul Kopsch of Lorain County said bodies of these persons had been recovered:

Phil J. Lehman, 46, of Cleveland, a fireman on the wrecked train.

George P. Rummel, 55, of North

(Continued On Page 2)

THANKSGIVING CALLED MARK OF CHRISTIAN

"The Christian life is a 'thank you' life but being thankful consists not only of a relationship with God but also with our fellow men," the Rev. Francis Reinberger, professor of practical theology at the Gettysburg Lutheran Theological Seminary, said Sunday evening in the final Community Week of Prayer sermon.

The service was held in the Methodist Church with a near-capacity audience present. The Rev. Harry Fehl Jr., pastor of the Memorial EUB Church here, conducted the service. The Cecilian Choir of the EUB Church under the direction of Miss Evadel Crider sang the anthem "More Like the Master."

The Rev. Mr. Reinberger opened his sermon with the legend of the two angels sent from heaven to earth to gather prayers of petition and of thanksgiving and then he said: "Thanksgiving is at the heart of all religion for to be religious means to acknowledge dependence upon a power stronger than ourselves. Therefore all of our prayers and all of Christian life must be set in a framework of prayers of thanksgiving."

Elements Of Thankful Heart

Citing specially passages from the Psalms and from Paul's letters the speaker continued: "It is small wonder then that the

(Continued On Page 3)

Third Landfill Has Been Licensed

Adams County's third sanitary land-fill was established last week with Kenneth F. Noel, Gettysburg R. 5, starting operating of a landfill on the property of Kenneth Hostetter, Hanover R. D., along the Gettysburg-Hanover Rd.

Noel received a license for three years from the Union Twp. supervisors permitting him to use the landfill for dumps from Conewago, Mt. Pleasant and Union Twps., Littlestown and McSherrystown.

Constructed by the Conewago Construction Co., the 150-foot-long, 40-foot-wide, 15-foot-deep landfill is patterned after the Penn Twp. landfill operated by Hanover, Attorney Ronald Hagerman, representing Noel, said.

Previous landfills had been established by Robert Miller in Oxford Twp. and Paul Plank Jr in Highland Twp.

Dies In Lutheran Home In D. C. Today

Harry G. Duttera, 93, formerly of Littlestown, died this morning in the National Lutheran Home in Washington, D. C. He was a son of Rufus and Catherine (Bittinger) Duttera and was the last of his family.

His wife, Fannie Hornberger Duttera, died a number of years ago. Mr. Duttera's only survivors are nephews and nieces.

The deceased was a member of St. Paul's Lutheran Church, the Odd Fellows and the POS of A lodges of Littlestown.

Funeral services Wednesday afternoon at 2 o'clock at the Little Funeral Home in Littlestown with his pastor, the Rev. Lawrence H. Roller, officiating assisted by the Rev. D. S. Kammerer, a former pastor. Interment in the Mt. Carmel Cemetery, Littlestown. Friends may call at the funeral home Tuesday evening.

Eisenhowers Go To White House

President and Mrs. Eisenhower returned to the White House late Sunday afternoon after a leisurely weekend at their farm home here. They left the farm about 4 p.m. and one hour and 45 minutes later were in Washington.

Shortly before leaving the farm, the President and his wife visited with their four grandchildren. They live with their parents, Maj. and Mrs. John Eisenhower, in their home at the northwest corner of the Eisenhower property.

On Saturday the President spent some time inspecting his livestock and then he and Major Eisenhower and George Allen, a friend and neighbor of the President, spent some time skeet shooting at the farm. The skeet shooting equipment had been installed at the farm some time ago as a gift.

ADAMS FIRE GROUP MEETS

The Adams County Volunteer Firemen's Association is finding decisions of state auditors checking the Firemen's Relief Association books "confusing," according to a report of the association's meeting last Monday at Centennial released today by the association's recording secretary, Donald Sneeringer.

Sneeringer's report states, "Reports were given by different companies on the recent audit of the Relief Associations. It seems that each auditor has a different view of the purpose of this association and has left the companies in Pennsylvania in a mass of confusion as to how to conduct this fund. Attempts are being made to clear up some of this confusion by trying to find some responsible person who knows the answers, if there is anyone like that."

The county association also reported further attempts to have fire companies made exempt from the four per cent sales tax. Sneeringer's report said a request for a exemption number by the county firemen's association led to a decision at Harrisburg that it was not a charitable or non-profit organization.

Fifty-two delegates from 16 companies attended the meeting which was presided over by Vice President Eugene Long. The group voted to meet again at the Conewago Fire Company Hall April 4. Following Monday's meeting the group viewed a new fire truck designed for fighting field and grass fires.

GRANT FOR COLLEGE

Gettysburg College is among 119 colleges and universities to receive a cash grant from the Corn Products Company in recognition of the contributions made to the company's success by the institutions through education and training of its personnel. Gettysburg received $120. The awards were given in proportion to the number of graduates employed by the various schools.

BOARD TO MEET

The January meeting of the board of directors of the Adams County Crippled Children's Society will be held Wednesday afternoon at 4:15 o'clock at the Methodist Church here. Notices have been sent to members by Miss Ellen R. Miller, secretary.

EXCHANGE TO MEET

The Gettysburg Exchange Club will meet Tuesday evening at 6:30 o'clock at the Plaza Restaurant, Secretary David Rutters has announced.

DISTINGUISHED MEN HELPING TO SAVE FIELD

Descendants of two of the top generals of the Civil War, nine governors, seven senators and six congressmen are among the members of the advisory committee of the Gettysburg Battlefield Preservation Association, it was announced at a meeting of the board of directors of the association at the Hotel Gettysburg Sunday afternoon.

Major William M. Haller, Fort George G. Meade, chairman of the association, said he had received acceptances from the following to invitations that they serve on the advisory committee of the association which is seeking to raise funds to purchase land for the Gettysburg Battlefield.

The descendants of the generals are Maj. Gen. U. S. Grant III, Washington, D. C., grandson of the Union Army's General Grant, and Robert E. Lee 4th, San Francisco radio executive and great-grandson of the Confederate Army's General Lee.

Governors And Senators

Governors who have accepted membership on the advisory committee include David L. Lawrence of Pennsylvania; J. Lindsay Almond Jr., Virginia; J. Caleb Boggs, Delaware, Price Daniels, Texas; Foster Furculo, Massachusetts; Luther H. Hodges, North Carolina, Robert B. Meyner, New Jersey; J. Millard Tawes, Maryland, and S. Ernest Vandiver, Georgia.

The seven senators are Joseph S. Clark and Hugh Scott, of Pennsylvania; J. Glenn Beall and John Marshall Butler of Mary-

(Continued On Page 3)

CASE MOVES NEARER TRIAL

The Adams County court put the action to quiet title brought by Alton W. and Hallie A. Snyder against William M. Munroe Hartford Fire Insurance Co. and Paradise Mutual Insurance Co. one step closer to a trial Saturday with a nine-page opinion dismissing the plaintiff's preliminary objections to the defendant's answer and new matter.

The court had previously similarly disposed of the objections the defendants had raised against the original petition, asking the court to throw out the action to quiet title.

The matter pertains to action taken by the insurance companies after a fire had destroyed property owned by the Snyders near Fairfield in 1955.

The insurance companies paid off the holder of the mortgage on the property and then took over the mortgage with Munroe as their agent.

The Snyders claim that by paying off the mortgage, the insurance companies cleared that portion of their debt, and that the mortgage against them should be satisfied. The insurance companies claim, according to the opinion, that the dwelling was "intentionally burned" either by Alton Snyder or at his direction.

Three Properties Are Transferred

Deeds have been filed in the office of the register and recorder for the following property transfers:

H. Glenn and Mae R. Stump, Straban Twp., to Samuel L. Franklin Washington, D. C., five tracts of land, in Huntington and Tyrone Twps., $14,000.

Lloyd E. and Irma B. Miller, Biglerville, to Nevin J. Fair, Straban Twp., a lot in Straban Twp., $4,500.

Kermit L. and Jean E. Sebright, Huntington Twp., to Kenneth O. and Joar A. Emlet, York Springs, a lot in Huntington Twp., $300.

Has Returned Home After Artery Graft

Lt. Charles H. Drum, McKnightstown, of the hospital corps of the U. S. Navy, has returned home from Bethesda Naval Hospital where he underwent an operation for an artery graft.

Lt. Drum had suffered an aneurysm of the abdominal aorta. At the Naval Hospital physicians removed the aneurysm and replaced a portion of the artery with a plastic section.

He is expected to return to the Naval Hospital in three months for a check by physicians on the success of the operation.

ADVISORS MEET TONIGHT

The citizens' advisory committee of Gettysburg College will meet at the Student Union Building this evening at 8 o'clock to plan for the Student Union community open house. A tour of the building will follow, according to William G. Weaver, chairman.

NewspaperARCHIVE.com

MEANY WARNS ABOUT REVOLT IN NOVEMBER

WASHINGTON (AP)—AFL-CIO President George Meany said today the administration and Congress can expect a voters' revolt in November unless the "Washington posture of sit-down and do-nothing" is changed.

The American people, Meany said, "do not see any point or profit in the collapse of the functions of our government, whether the breakdown takes place in the middle of the road or on either side."

Meany's remarks were prepared for the opening of a three-day rally of 600 AFL-CIO union officers called to drum up support for a series of union-wanted measures in Congress.

He said the country has been drifting backward, instead of forging ahead.

"Not only in outer space but right here on solid earth," he said, "the United States faces an enormous and growing deficit — in national defense in education, in housing, urban renewal, industrial expansion, social security, modern roads, airports and community facilities."

COMPANY CUTS DEBT BY $1,000

The Conewago Fire Company reduced the debt on its new fire hall at Edge Grove to $4,000 at its meeting on Friday evening by voting to pay another $1,000 on the principal of the bank loan.

The report of the auditing committee showed the company had receipts of $13,017.27 for the year and spent $11,205.72, leaving a balance of $1,811.55.

Fire Chief H. Carroll Sneeringer reported no fires during the month and made these appointments: Second assistant chief, Raymond F. Timmins; truck foreman, Thomas Miller; truck drivers, Thomas Miller, Joseph Staub, Donald Sneeringer, Edward Timmins, Bernard Livelsberger, Richard P. Smith, Carroll G. Sneeringer and Paul Legore; chief radio operator, Richard J. Smith; chief hoseman, Ralph Oyster, and chief nozzelmen, James Timmins and Guy Sentz.

First Assistant Chief Robert E Smith announced plans for a training program nexty spring for all personnel. Admitted as active members were Raymond Livelsberger and James Bethas

President Francis W. Miller appointed John Timmins as janitor and Raymond Moore, John Timmins and Guy Sentz as the house committee.

The annual free feed for the firemen were served by Raymond Moore and Rodney Little.

Next meeting of the company will be held on February 12. Secretary Donald Sneeringer announced.

BURY MRS. STUDY

Funeral services for Mrs. Clara M. Study, 77, widow of Franklin E. Study, who died at her home on N. Queen St., Littlestown, on Friday, were conducted Sunday afternoon at 2 o'clock from Little's Funeral Home, Littlestown. The Rev. Samuel A. Garrett, pastor of Assembly of God Church, near Littlestown, officiated. Interment was in St. Mary's Cemetery, Silver Run Serving as pallbearers were six nephews: Guy Herbert and Roy Lippy, William and Richard Byers and David Wantz.

THE WEATHER ELSEWHERE

By THE ASSOCIATED PRESS

	High	Low	Pr.
Albany, clear	12	4	.14
Albuquerque, rain	47	38	T
Anchorage, snow	18	14	T
Atlanta, cloudy	54	42	
Bismarck, clear	31	19	
Boston, cloudy	16	10	.13
Buffalo, snow	27	17	.03
Chicago, cloudy	43	33	T
Cleveland, cloudy	47	32	.02
Denver, cloudy	60	27	
Des Moines, cloudy	31	26	
Detroit, clear	40	25	
Fort Worth, rain	75	61	T
Helena, cloudy	15	3	
Honolulu, rain	73	69	
Indianapolis, cloudy	48	37	
Kansas City, rain	44	32	T
Los Angeles, clear	56	46	.87
Louisville, cloudy	57	49	
Memphis, cloudy	60	55	
Miami, clear	77	67	
Milwaukee, cloudy	39	19	
Mpls-St. Paul, cloudy	27	10	
New Orleans, cloudy	74	53	
New York, cloudy	33	21	.05
Oklahoma City, cloudy	64	45	
Omaha, cloudy	27	25	
Philadelphia, cloudy	38	36	
Phoenix, rain	59	50	.04
Portland, Me., clear	11	5	
Portland, Ore., cloudy	32	30	.16
Rapid City, cloudy	40	29	
Richmond, cloudy	66	48	
St. Louis, cloudy	58	41	
Salt Lake City, cloudy	46	38	
San Diego, cloudy	59	53	.48
San Francisco, cloudy	53	48	.07
Seattle, cloudy	35	31	.18
Tampa, cloudy	77	54	
Washington, cloudy	57	41	

(M — Missing: T — Trace)

The largest county in the United States is San Bernardino, Calif., with an area of more than 20,000 square miles. It is larger than eight states.

Social Happenings

For Social News Phone ED 4-4613 or 4-1131

The WSCS of the Gettysburg Methodist Church will meet Tuesday evening at 7:45 o'clock at the church. The program, "The Role of the Christian-African Woman," will be presented by Mrs Richard Naugle. Devotions will be led by Mrs Kent Witherow, and Mrs John Madsen will be hostess chairman

* * *

Mahlon P. Hartzell, E. Lincoln Ave., is visiting Mr. and Mrs. H. H. Thomas, Fort Myer, Fla.

* * *

Circle Three of ULCW of Christ Lutheran Church will meet Wednesday evening at 8 o'clock in the church parlor. Dr and Mrs. Jacob Heikkinen will present a program on Christian music and Christian living featuring John Sebastian Bach and Albert Schweitzer. Mrs. E. D. Freed will lead devotions. The hostesses will be Mrs. Waldemar Zagars and Mrs. Mary Martin.

* * *

The following students have returned from Green Park Union High School where they represented Gettysburg High School at the District Chorus Festival: Robert Baker, Barclay Collins, Paul Deitz, Doris Hamme and Kay Smith. Paul Deitz was selected as one of the soloists.

* * *

A surprise birthday party was held Friday evening in honor of John M. Clabaugh Sr., R. 5, on the occasion of his 70th birthday. Those attending were his children: Mrs. Bernard Selby, Mr and Mrs Carroll Oaster, and Mr and Mrs. Guy Clabaugh, all of Littlestown, Mr and Mrs James Clabaugh, Hanover; and Mr. and Mrs. Francis Clabaugh, Mr. and Mrs. Bernard Clabaugh, Mr. and Mrs. Robert Clabaugh, Mr. and Mrs. Clarence Clabaugh, Mr. and Mrs. Edgar Bowling, Mr. and Mrs. Joseph Clabaugh, Mr. and Mrs. John Clabaugh Jr. and Mr and Mrs. Bernard Sneeringer, all of Gettysburg.

* * *

The Xi Alpha Ci Chapter of Beta Sigma Phi will meet this evening at 8 o'clock at the home of Mrs. Donald Uber, 319 Barlow St. All members are asked to bring "white elephant" gifts.

* * *

Members of the sophomore and junior classes of Gettysburg College chapter of Phi Mu were entertained Sunday evening at a supper meeting in the chapter room by the Phi Mu Alumnae Club.

* * *

Mrs. Herbert C. Utech, W. Middle St., has returned home after spending two weeks with her son and daughter-in-law, Mr. and Mrs Eugene Utech and daughters, Susan and Ann Elizabeth, Confluence.

* * *

Mr. and Mrs. Paul W. Grove, R. 2, entertained Saturday at a surprise birthday party for their son, John. It was the occasion of his sixth birthday. Guests included Betsy Bloser, Scott Keller, Susan Raffensperger, Bill Reinhart, Lynn Sheppard, Jimmy Sheppard, Mark Sneeringer, Elizabeth Ann White, John and Eric Grove and Mrs. Katherine Grove.

* * *

Ronald Asper, son of Mr. and Mrs. Wayne Asper, R. 3, and Donald Eckert, son of Mr. and Mrs. Curt Eckert, R. 3, left Saturday for Minneapolis, Minn., where both have enrolled as students at the Humboldt Institute.

* * *

The Women of the Moose will hold their regular meeting Tuesday evening at 8 o'clock at the Moose home. Child Care Chapter Night will be observed and refreshments will be served.

* * *

Lester Cool, Hanover, who recently underwent surgery at the Polyclinic Hospital, Harrisburg, is reported in fair condition.

* * *

Weekend guests at the home of Miss Margaret C Howard, E. High St., were her brother-in-law, Ray Hoffman, Lemoyne, and Mr and Mrs. Paul Givler and son, Dennis, New Cumberland. Mrs. Givler is Miss Howard's niece.

* * *

The Acorn Club will meet Wednesday evening at 8 o'clock at the home of Miss Effie Singley, Baltimore St.

ROBINSON RITES TUESDAY

PITTSBURGH (AP) — Funeral services will be held here Tuesday for Stewart "Red" Robinson, former lightweight boxer, fight referee and baseball umpire.

He died Saturday night at the age of 71

Robinson once held battling Nelson to a draw when the latter no longer was champion.

He hung his gloves in 1919 and went into umpiring, putting in 15 years in the Eastern, Central, Mid-Atlantic and Three-Eye Leagues.

American Hockey League

By THE ASSOCIATED PRESS

Saturday's Results

Buffalo 5 Cleveland 4 (overtime)
Hershey 8 Quebec 1
Springfield 7 Rochester 5

Sunday's Results

Buffalo 5 Hershey 4
Providence 4 Springfield 2
Rochester 7 Quebec 2

Monday's Schedule

No games

Tuesday's Schedule

No games

Wedding

Warehime—Zinn

Miss Linda Lee Zinn, daughter of Mr. and Mrs Alvin C Zinn, Hanover, formerly of New Oxford R. 1, became the bride of Frederick Cornell Warehime, son of Mr. and Mrs Mervin M Warehime, Hanover, at 2 o'clock Sunday afternoon in Trinity United Church of Christ Church.

Rev. Dr. H. E. Sheely, pastor, and Rev. Harold M. Warehime, New York City, brother of the groom, performed the double-ring ceremony.

Given in marriage by her father, the bride was attired in a floor-length gown of imported hand-clipped Chantilly lace. The fitted bodice was fashioned with a Peter Pan collar and three-quarter-length sleeves and the bouffant skirt ended in a chapel train. Her fingertip-length veil of silk illusion fell from a cap trimmed in tiny pearls and iridescent sequins. The bride carried a front line bouquet of white carnations and red rosebuds with shower ribbon.

Maid Of Honor

Ellen Starner, New Oxford R. 1, was maid of honor. Lois Baugher, New Oxford R. 1, and Darlene Baker, Abbottstown R. 1, served as bridesmaids. All are former schoolmates of the bride.

The honor attendant wore a red taffeta gown with net overskirt, long sleeves, matching accessories and carried a bouquet of white and blue-trimmed carnations. Misses Baugher and Baker wore matching royal blue taffeta gowns with net overskirts, bell sleeves and matching accessories. Their bouquets were white and red-trimmed carnations

The bride's mother wore a navy blue sheath with winter white accessories and an orchid corsage. The bridegroom's mother wore a two-piece aqua dress with green and brown accessories and an orchid corsage.

150 At Reception

Walter Scott Rhinehart, New Oxford, served as best man. Ushers were George R. Zinn, Westminster, Md., brother of the bride; David Raber, Hanover, the bride's uncle; George Saltzgiver Jr., Hanover R. 1, and Leroy Saltzgiver, Hanover R. 2, cousins of the bridegroom. The flower girl was Dawn Michele Zinn, Westminster, the bride's niece, and ring bearer was Gary Eugene Saltzgiver, Hanover R. 2.

Jesse L. Betlyon, Hanover, sang "I Love You Truly" and "At Dawning." The church organist, Mrs. Robert Flickinger, played "Chant d'Amour," "On Wings of Song" and "Romance."

About 150 guests attended the reception in Grangeville Fire Hall after which the newlyweds departed for a Florida wedding trip. They will reside at 509 Baltimore St., Hanover.

The bride is a New Oxford High School graduate and was employed in Gettysburg National Bank prior to moving to Hanover recently. A graduate of Eichelberger Senior High School, the bridegroom was graduated from Pittsburgh Trade School and now conducts a plumbing and heating business at his home.

Detoured

(Continued From Page 1)

Butler, Ind., an off-duty conductor.

Kenneth Hale, 42, of Route 1, Rosedale, Ind.

Unidentified Woman Killed

An unidentified woman of about 55 who died before reaching an Oberlin hospital.

Allen Memorial Hospital at Oberlin, which received most of the injured, said it had treated and released 33 persons and admitted 19. It is 10 miles from the wreck scene.

Other injured were sent to hospitals in Elyria, Norwalk, Medina and Lodi.

A New York Central spokesman said the carrier's investigators had not determined what caused the wreck. He said the Southwest Limited moved at a "pretty good clip" through that area

The three-unit diesel flipped on its side, and the mail car, which was unoccupied, straddled the tracks crosswise behind it. The combination baggage-coach came to rest sideways against the mail car, and the first coach mashed into its middle.

Five Others Derailed

Two other coaches and three Pullmans that followed were derailed. Only the last car, a diner remained on the tracks.

Margaret Taylor, an East Cleveland housewife and former newspaperwoman, was on the third coach. She said there was "a terrific jolt and baggage started falling all over the place."

"Almost everyone was real scared, and some had bruises. Then it seemed about two weeks until we all got out."

PROTEST LEGION LEAD

FRANKLIN, Pa. (AP)—Legionaires from five counties in northwestern Pennsylvania are bitterly protesting what they call the incompetpency of State Legion Commander William F. Malone of Scranton.

At a meeting Sunday, representatives of 28 posts in Venango, Warren, Forest, Mercer and Elk Counties expressed displeasure at the way Legion affairs are being concucted in Pennsylvania.

Engagements

(Continued From Page 1)

MISS RECK

Mr. and Mrs. P. J. Reck, Hanover, announce the engagement of their daughter, Sandra L., to Marlin C. Cluck, son of Mr. and Mrs. Kermit L. Cluck, Steinwehr Ave.

Miss Reck is a graduate of Hanover High School with the class of 1958. She is employed by Allen S. Pressell Flower Shop, Hanover.

Mr. Cluck attended Gettysburg High School and is employed by Bix-Sway Boys' and Men's Shop.

Wedding plans are incomplete.

MISS CAROLE LANDIS

Mr. and Mrs. Jesse C. Landis, Cashtown, announce the engagement of their daughter, Carole Ann, to Carl M. Kidwell Jr., foster son of Mr. and Mrs. Harry F. Biesecker, Cashtown.

Miss Landis is a graduate of Gettysburg High School with the class of 1959 and is employed at the Annie M. Warner Hospital.

Mr. Kidwell is also a graduate of Gettysburg High School with the class of 1959 and is employed at the Lincolnway Nurseries, Cashtown.

No date has been set for the wedding.

Shellenberger—Rudisill

Mr. and Mrs. Raymond Rudisill, near Spring Grove, announce the engagement of their daughter, Dorcas, to Robert Shellenberger, son of Mr. and Mrs. Lewis Shellenberger, near Two Churches.

The bride-elect was graduated in 1959 from Spring Grove Joint High School and her fiance is a 1957 graduate of East Berlin High School. No date has been set for their wedding.

Moltz—Brownewell

Mr. and Mrs. William H. Brownewell III, Lemoyne, have announced the engagement of their daughter, Miss Donna Rae Brownewell, to John M. Moltz Jr., son of Mr. and Mrs. John Moltz, New Cumberland.

Miss Brownewell, a graduate of West Shore High School, is employed in the revenue accounting department of Bell Telephone Co., Harrisburg.

Her fiance is a senior at Gettysburg College. Upon graduation he will be commissioned a second lieutenant in the Army.

Walker—Bingaman

The engagement of Barbara Ann Bingaman, daughter of Mr. and Mrs. Fred Bingaman, Hellam R. 1, to Robert J. Walker, son of Mr. and Mrs. Thomas J. Walker, New Canaan, Conn., has been announced by her parents.

The prospective bride, a graduate of Eastern High School, is a junior at Gettysburg College. Her fiance, a graduate of Worcester Polytechnic Institute, Worcester, Mass., is a chemical engineer affiliated with Darr-Oliver, Inc., Stamford, Conn.

Harmon—Bankert

Mr. and Mrs. George W Bankert, West King Street, East Berlin, announce the engagement of their daughter, Betty Jane, to John Cecil Harmon, Dover R. 4. Miss Bankert is a 1958 graduate of East Berlin High School.

Smith—Rang

Mr. and Mrs. Albert Rang, Abbottstown R. 1, have announced the engagement of their daughter, Jessie F., to James E. Smith, son of Mrs. Helena Smith, York.

Miss Rang is a 1959 graduate of Delone Catholic High School and is employed at WHVR radio station.

Smith is a 1958 graduate of York Catholic High School. He is employed at Stillman's Department Store, York.

Tallest men on Mississippi's basketball team are seniors Ivan Richmann and Louis Griffin. Both are 6-feet-7.

Upper Communities

Telephone Mrs. John Leeti, Biglerville 8

The Buchanan Valley Rod and Gun Club will hold its January meeting Tuesday evening at 8 o'clock at the club house, Orrtanna R. D. There will be election of officers for 1960.

The Cashtown Community Lions Club will hold a regular meeting Tuesday evening at 7 o'clock at the Cashtown community hall. Dignitaries from Lions International will be present. The completion of the election of officers will take place. Anyone in the Cashtown area interested in joining the organization is invited to attend.

The United Lutheran Church Women of Bender's Lutheran Church, Butler Twp., will meet o'clock in fellowship rooms of the church. Mrs. Ralph G. Bream will be the leader. Members are asked to bring material which will be used for quilt patches and packed at this meeting for the Rocky Boy Mission in Montana.

The Fidelis Sunday School Class of Bender's Lutheran Church, Butler Twp., held its January meeting Friday evening in the social room of the church. The hostesses were Mr. and Mrs. George Wagner, Mr. and Mrs. Fred Snyder and Mr. and Mrs. Harold Hess. Mr. and Mrs. Glenn Xime were in charge of the devotions.

The Ladies Auxiliary of the Arendtsville Fire Co. will hold its regular monthly meeting Thursday evening at 7:30 o'clock in the social room of the Arendtsville Bank. Each member is asked to bring an article of food to be auctioned at the close of the business meeting. The hostesses will be the newly-elected officers. All members are urged to attend. The dues for 1960 are due and payable to the treasurer, Mrs. Bernadine Hoke.

Paul F. Osborn, of near Brysonia, returned Saturday night from Minneapolis, Minn., where he attended the convention and exposition of the National Turkey Federation. The trip was made by plane.

The Jolly Eight Club will be entertained Tuesday evening at 8 o'clock at the home of Mrs. James Parry, Biglerville R. 1.

The Shushonnian Gun Club will hold its regular monthly meeting Tuesday evening at 8 o'clock at the club house, near Pitzer's Truck Terminal, Aspers R. 1.

The '50 Club will meet Wednesday evening at 8 o'clock at the home of Mrs. Donald Hollabaugh, Biglerville R. 1. Mrs. Clifford Rice will serve as co-hostess with Mrs. Hollabaugh.

Miss Pat Reinecker and her roommate at the Harrisburg General Hospital School of Nursing, Miss Kay Prier, Onanock, Va., spent the weekend with the former's mother, Mrs. Grace Reinecker, Biglerville.

Mr. and Mrs. George Albro, Arnold's Park, Iowa, visited Saturday with Mr. and Mrs. W. Clayton Jester, Biglerville R. 2.

Mr. and Mrs. Clyde Sell have moved into their newly constructed home on N. High St., Arendtsville.

The United Lutheran Church Women of St. Paul's Lutheran Church, Biglerville, met Friday evening at the parsonage. The topic, "Africa," was led by Mrs. W. R. Thomas. A film on progress made in the mission fields in Africa during the last 100 years was shown. Mrs. Sterling Kint and Mrs. William Wentzel were received into the organization. Mrs. Ross Schwartz recently joined the ULCW. There were 24 members and guests present.

16 Countians To Dance At Show

Sixteen members of the Adams County Senior Extension Club will take part Tuesday night in the Folk Dance Festival to be held as part of the Farm Show at Harrisburg.

Members of the team entered by the county club in the Division B competition are Paul, Janet and Ruth Bretzman, Bendersville; Carroll Spence, Orrtanna; Teresa Murren, McSherrystown; Mary Wetzel and Melvin Meyers, of Hanover R. D., and Richard Weaner, of Gettysburg R. D.

Comprising the Division C team are William and Millicent Lehman and Nadine Reinecker, all of York Springs; Genille Aspers, Hanover R. D.; George Stock, New Oxford R. D.; Carl Carey, Bendersville, and Dorothy Keller and Merle Byers, both of Gettysburg R. D.

WASHINGTON (AP) — Tackle Andy Stynchula of Penn State has signed a contract with the Washington Redskins of the National Football League.

Assistant Coach Bill McPeak said the 240-pound lineman from Old Crabtree, Pa., signed the contract Saturday after the Senior Bowl game at Mobile, Ala.

Terms were not disclosed.

CONGRESSMEN GET BRIEFING

WASHINGTON (AP) — Despite disagreement whether they should, top congressional Democrats join Republicans at the White House today for a bipartisan briefing by President Eisenhower on his 11-nation good-will journey.

Invited to the late afternoon meeting were leaders of the Senate and House, and chairmen and senior members of the Armed Services, Foreign Relations and Appropriations committees.

There were reliable reports that some Democrats were less than enthusiastic about accepting the President's invitation. Some said in advance they thought the meeting would be little more than a travelog.

There also was evident feling on the part of at least two influential party members that they were being asked to lend Democratic approval to an Eisenhower excursion in personal diplomacy which the Republicans are certain to emphasize in the presidential campaign.

DEATHS

Irvin A. Myers

Irvin A. Myers, 88, a native of Carroll Co., Md., who resided until two years ago on Park Ave., Hanover, died at Pleasant Acres, York Co., at 5 a.m. on Sunday. A son of the late John T. and Mary Miller Myers, he is survived by three children, Levern C. Myers, Finksburg; Mrs. Mary McSherry, York; Lester L. Myers Hollywood, Fla.; also 12 grandchildren, four great grandchildren and two sisters, Miss Mary Myers and Mrs. Emma Hoke, of 17 Linden Ave., Hanover.

Funeral services conducted on Tuesday morning at 10:30 a.m. from Little's Funeral Home, Littlestown. The Rev. Lloyd H. Seiler, pastor of St. Mary's Lutheran Church, Silver Run, will officiate. Interment will be in St. Mary's Cemetery, Silver Run. Friends may call at the funeral home this evening.

Timothy S. Lawver

Interment services for Timothy S. Lawver, son of Mr and Mrs. Charles Lawver, 218 Miller St., Chambersburg, who died at birth at the Warner Hospital Sunday, were held this afternoon in Evergreen Cemetery with the Rev. C. Reynolds Simmons, pastor of the Marsh Creek Church of the Brethren, officiating.

Survivors include the parents; a sister, Judith S., and a brother, Charles Lawver, both at home; the maternal grandparents, Mr. and Mrs. Cletus Plank, Gettysburg R. 5, and the paternal grandparents, Mr. and Mrs Donald Lawver, Gettysburg R. 5. The funeral arrangements were made through the Peters Funeral Home, Carlisle St.

Accuses Kennedy Of Ignoring Labor

BUFFALO, N.Y. (AP)—James R. Hoffa, Teamsters Union president, has accused Sen. John F. Kennedy (D-Mass) of ignoring labor in his bid for the 1960 Democratic presidential nomination.

In an address before 1,000 members of the Buffalo Joint Council of Teamsters Sunday night, Hoffa called Kennedy a "fraud on the American people."

At a press conference earlier, Hoffa said the Massachusetts senator "has sacrificed the American labor movement in the hopes of getting some help in Los Angeles from the Southern bloc at the presidential convention."

He referred to Kennedy's part in amending the Landrum-Griffin labor bill.

LUNCHEON MEETING

The board of directors of the Adams County Council of Community Services will meet Tuesday noon at a luncheon at the Dutch Cupboard, Baltimore St. Chairmen of committees and of the divisions of health, welfare and recreation are to present reports at the meeting.

FILE ESTATE BOND

A bond of administration has been filed at the office of the register and recorder for the estate of Helen M. Bowers, late of Littlestown, valued at $5,000, by Donald W. Bowers, Hazel C. Harrison and Marie E. Arter.

LANCASTER LIVESTOCK

LANCASTER, Pa. (AP)—Cattle 2,400: choice slaughter steers 25.75; high choice 28.00-28.50; good and choice steers 24.50-28.25; good and choice stock calves 26.00-30.00. Calves 450: good and choice 29.00-34.00; primes 33.00-39.00; a few sold at 40.00 and 41.00 Hogs 1,200; barcows and gilts 13.50-14.25. Sheep 450: wooled slaughter lambs 18.50-21.00; a few choice lots sold at 22.00.

NEW YORK EGGS

NEW YORK (AP)—(USDA)—Wholesale egg offerings relatively heavy. Demand spotty. Receipts (2 days) 19,200. New York spot quotations: Nearby: whites: Top quality (48-50 lbs) 30½-34½; mediums 28-29; smalls 23½-24½. Browns: Top quality (48-50 lbs) 30½-32; mediums 28-29; smalls 25-26.

FINE LEATHER GOODS by BUXTON for Both Ladies and Gentlemen

BLOCHER'S Jewelers Since 1887

"PERK UP" YOUR BATHROOM With New Fixtures

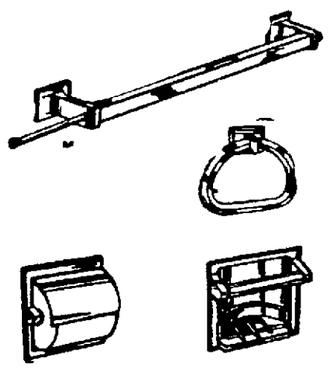

Hallmark Towel Bars Various Sizes

• Paper Holders

• Tumbler and Soap Holders

GEO. M. ZERFING HARDWARE STORE

Gettysburg Littlestown

Free Parking at Rear of Store

GO PONTIAC For Wide Track Wheel Suspension For Safe Smooth Ride Only

PONTIAC Has It to Offer

1960 Pontiac Now On Display

H. & H. MACHINE SHOP

Open Evenings Till 9:00 O'clock

S. Washington Street Gettysburg, Pa.

BUTCHERING SUPPLIES

Lard Cans — Butcher Knives
Scrapple Pans — Meat Saws
Liquid Smoke — Sugar Cure
Sausage Seasoning

— WE GIVE S&H GREEN STAMPS —

Redding's Supply Store

30 YORK STREET SHOP HERE—PARK IN REAR

PEACE LIGHT INN MENU

OTHER DAILY SPECIALS

Monday ..... Minute Steak
Tuesday ..... Baked Beef Pie
Wednesday ..... Salisbury Steak
Thursday ..... Creamed Chicken Patty Shell
Friday ..... Tuna Fish Casserole

Also Serving Your Favorite Sea Food and Cocktails

SUNDAY, JANUARY 17

$1.50 SPECIAL

ROAST TURKEY AND FILLING

or

BAKED COUNTRY HAM With Pineapple Sauce

PETERS FUNERAL HOME 321 Carlisle St. Ph. ED 4-5815 Gettysburg, Pa.

DITZLER'S MUSIC SUPPLIES Phone ED 4-1412 Open Evenings Till 9 O'clock 12 Baltimore St., Gettysburg

Your Advertising In The Times Doesn't Cost . . . . . It Pays

Littlestown

JOINT BOARD TO DECIDE ON MERGER VOTE

The Joint Board of the Littlestown Jointure will meet on Tuesday evening at 8 o'clock at the high school building on Maple Ave. The individual board sessions will follow the January meeting is a decision on whether a merger vote will be put on the ballot at the spring primary in April.

Mrs. John F. Feeser Jr., "Knob Hill," near town, will be hostess to the Eta Tau Chapter of the Beta Sigma Phi Sorority for the meeting Tuesday evening at 8 o'clock. Mrs. Bernard Little will be leader for the cultural program on "Literature."

The Woman's Society of Christian Service of Centenary Methodist Church will meet at 7:30 p.m. on Tuesday at the church. Mrs. Mary Miller will be the devotional leader and the January hostesses will be Mrs. Estella Furlow, Mrs. Helen Barton, and Mrs. Charlotte Byers. The pa tor, the Rev. William R. Jones, will continue the studies in the Gospel according to St. Luke.

Craig Michael King, infant son of Loy Lee and Jean Mitz King, was baptized on Sunday in Centenary Church by the Rev. Mr. Jones. The parents were the baptismal sponsors. The child was born September 18, 1959 in the Warner Hospital, Gettysburg.

Meetings Announced

The International Service committee composed of Howard A. Stonesifer, chairman, Arthur E. Bair Sr., Lloyd E. Crouse, Thomas C. McSherry Clarence R. Reck, Luther W. Riter and Lloyd L. Stavely will be in charge of the program at the weekly dinner meeting of the Littlestown Rotary Club on Tuesday at 6:15 p.m. at Schottie's Hotel

Mason and Dixon Memorial Post No. 6954, Veterans of Foreign Wars, will meet for the semi-monthly session tomorrow evening at 8 o'clock at the post home, W. King St.

The newly formed ushers group of St. Paul's Lutheran Church will meet on Wednesday at 7:30 p.m. at the church

Receive Donations

St. Aloysius Parish Council of Catholic Women received contributions for the Diocesan Activities Fund of the Council of the Harrisburg Diocese following the Sunday morning masses in St. Aloysius Church. Daily mass this week will be at 7:15 a.m. Tonight at 7 o'clock, there will be religious instructions for the Junior-senior high students of the parish attending public school; there will be instructions for a class of adults at 8 p.m. The weekly public party will be held at 8 p.m. in the parish hall, with Paul E. Altoff chairman of the committee on arrangements, and Mrs Bernard M. Selby heads the refreshment committee.

The Holy Name Society of St Aloysius Church met last evening at the church folowing the 7 o'clock service. Vice president Stewart N. Long was in charge. The opening prayer was offered by the Rev. Fr William A. Boyle, pastor, who also spoke briefly Secretary Ronald Coster gave his report. The quarterly meeting of the Southern Regional Holy Name Union was held on Sunday at St. Joseph's Catholic Church, Hanover, and Z W Sanders reported on proceedings at the meeting. The union will have a banquet on April 28 at the Knights of Columbus Hall, York. The Holy Name discussed fund-raising projects The next meeting will be held on Sunday, February 14.

ADVERTISE IN THE TIMES

Sketches

By BEN BURROUGHS

"THE FIRST SNOW"

The first snowfall is beautiful . . . this fact is more than true . . . it makes the drab and commonplace . . . so much brighter to view . . . it dresses every bush and tree . . . in gowns of purest white . . . to form a land of wonderment . . . a most magical sight . . . children rejoice when the first snowfall . . . polka-dots the sky . . . and as the drifts gets deeper . . . their spirits soar on high . . . I have locked in my memory . . . many times like this . . . when I, a youthful dreamer . . . captured snowflakes bliss . . . and though in just a little while . . . snow can make people frown . . . none can deny the beauty . . . of the first snow falling down.

Fairfield

FINAL PRAYER WEEK SERVICE HELD FRIDAY

Friday night brought to a close one of the most successful Weeks of Prayer ever held in the Fairfield community. It was the first time a guest speaker had been invited and Dr. J. E. Hartzler, Goshen, Ind , spoke each evening Sunday through Friday. All services were held in Zion Lutheran Church and all were largely attended.

On the concluding evening Dr. Hartzler showed the third group of pictures of his visit with Dr. Albert Schweitzer in Africa.

"On that trip around the world," said Dr. Hartzler, "I discovered that the two most talked about men in the world are Dr. Albert Schweitzer and President Eisenhower. When the world thinks about great men like that what will it mean in the next 25 years? It will mean great things."

Describes Schweitzer Visit

Dr. Schweitzer said: "Sometimes the light almost goes out in a man's life. Then it is blown into flame again when you meet a great soul or spirit. That is what happened to me when I met Dr. Schweitzer. Those were four of the greatest days of my life. Dr. Schweitzer is a man who understands."

"Meeting the Crisis" was the topic of Dr. Hartzler's final address. "A crisis," he said, "is something unfortunate that comes on a person by surprise when he is not prepared.

"There are two kinds of crises —those that come from the outside for which you are not responsible and those that comes from the inside for which you are responsible. When crisis comes from the outside we need to be prepared to hold together on the inside.

Christ Prepared

"Jesus knew the crisis of the cross was coming when He went to Jersusalem for the last time. But He prepared to meet it. When He told two disciples to go to the upper room to 'make ready' for the Passover He really meant that this was to be the preparation for the cross the next day, the most difficult day in His life.

"To get ready Jesus did four things: He observed a 1,500-year-old religious rite. Our communion table is 2,000 years old. There is something there we need, too; He drove the roots of conviction deep into the past, into the great prophets, especially Isaiah. People today let loose of the past before they have anything in the future to hold to. There is something there we need; He called around Him a few men who knew His best and talked things over. We, too, need each other.

"Then He went to the Garden of Gethsemane and talked things over with God. The victory was won in the Garden, not on Calvary. Too many people wait till they are on the cross and then don't know what to do.

"We can't wait till death, or disappointments, or reserves come to make ready for them. We must do it now by fortifying the mind with eternal truth, the heart with the love of God and the will with the divine purpose of the kingdom of God. This is the Christian way of meeting the crisis."

4 Generations At Birthday Party

Four generations of Weikerts Saturday attended a luncheon in the Hotel Gettysburg marking the 90th birthday of Mrs. Laura Weikert, widow of William P. Weikert, McKnightstown. Mrs Weikert is shown at center with a son, Lt. Gen. John Weikert, Washington, D. C., at her right and a grandson, William P. Weikert II, at her left. The great-grandchildren shown from left to right are Mary Ann, Carolyn and Bobby Weikert, children of Mr. and Mrs. William P. Weikert II. The elder Mrs. Weikert has three children, Paul Weikert, York; General Weikert and Mrs. Lloyd Crouse, Littlestown; four grandchildren and a number of great-grandchildren. Her late husband was well known as a blacksmith and cabinetmaker in the McKnightstown area and made the bodies for many of the early school buses in the area. (Times Photo)

Orrtanna

MRS. LUTHER WETZEL
Fairfield 125-R-12

ORRTANNA — The monthly study class of the WSWS of the Mt. Carmel EUB Church was held Tuesday evening at the home of Mrs. J. E. Spence with Mrs. William Weigle as leader who opened the meeting with a prayer. The chapter discussed was "The Stewartship Of Right Beginnings." Those participating besides the leader were: Mrs Alfred Gotwalt, Mrs. Paul Wetzel, Mrs. Claire Rebert, Mrs Ira Naugle, Mrs. Spence and Mrs Dale Wetzel.

The meeting closed with a prayer by the pastor, Rev. Alfred Gotwalt who was a guest. Refreshments were served by Mrs. Spence and a social hour followed.

Mr. and Mrs Louis Shulley and Mrs. Ruth Harmon, Fairfield, spent the New Year's Day with Mr. and Mrs. George Rock, brother-in-law of Mr Shulley and Mrs. Harmon, Waynesboro R. 4.

Mrs Frank Donaldson and Mr. and Mrs. Guy Donaldson and children, Beverly and Stephen, spent the weekend in Philadelphia where they were guests of the former's sister-in-law, Miss Clara Donaldson. Miss Donaldson, a native of Orrtanna, has been serving as a trained nurse in Jefferson Hospital in Philadelphia for many years.

Rev. and Mrs Alfred Gotwalt and son, Kenneth, were recent visitors with relatives in York.

The baby daughter born to Mr. and Mrs. Russell Sharrah at Warner Hospital December 31 has been named Sandra Irene. This is their sixth child and fifth girl. Both mother and baby are doing nicely.

Mr and Mrs. Paul Jacobs, Mrs. Slothers, mother of Mrs. Jacobs, and Miss Anna Jacobs, all of East Berlin, were recent guests of Mrs. Laura Cease.

THANKSGIVING

(Continued From Page 1)

scriptures are filled with encouragement that men shall give thanks but there is only one way a Christian really can say 'thanks' and that is by giving ourselves as living sacrifices of thanksgiving."

He then described three elements of a thankful heart. "The sense of gratitude in the human heart and mind must be born out of remembering the circumstances for which we are thankful and remembering what has been done for us. Then our thanksgiving will begin to grow with a sense of concern for our fellowmen. To be thankful means to be concerned about the lack of justice and freedom and human rights in the world today.

"There is no such thing as a private prayer in the sense that I can ever shut out of my life and prayers the needs and problemso f my fellow men.

"Then the full bloom of thanksgiving is born when we set out actively to take part in bringing about the will of God on earth. May we devotedly share the love of God so that one day our prayers may be answered and God's kingdom shall come on earth as it is in heaven."

The series of six union services began Sunday, January 3, and were held under sponsorship of the Gettysburg Ministerium. All of the services were held at the Methodist Church.

Weddings

Sebring—Rhine

Miss Doris Jane Rhine, daughter of Mr. and Mrs. Kenneth D Rhine, York, and S'Sgt. Crawford Delano Sebring, son of Mr. and Mrs. O. L. Sebring, York Springs, were married December 30 in Westminster, Md. Rev. R. J. Hiller performed the ceremony in the Methodist Church Chapel there.

The bride is a graduate of William Penn Senior High School with class 1957 and attended Thompson's College She was employed by the Sperry Hutchinson store, York

The groom is stationed with the U.S Air Force at Minot, N. D., where the couple will reside.

Poist—Haar

The Immaculate Conception Catholic Church, New Oxford, was the scene Saturday for the wedding of Miss Peggy Joan Haar, daughter of Mr. and Mrs G. Marion Haar, Abbottstown R. 1, and Donald Francis Poist, son of Mr. and Mrs. George Poist, New Oxford. The double ring ceremony was performed at 9 a.m by Rev. Phillip Gergen. The altar was decorated with mums and pompons in yellow and white. The organist was Miss Maria Noel.

Given in marriage by her father, the bride was attired in a beige street length dress of flowery lace.

The attendants were Mr. and Mrs. Cycil Staub, McSherrystown. Mrs. Staub wore a beige dress with green accessories The ushers were Harland C. Staub Jr., cousin of the bride, New Oxford, and Robert Poist, brother of the groom, New Oxford.

A reception followed the ceremony at the New Oxford Fire House For a wedding trip to Philadelphia, the bride chose a beige dress. Upon their return they will reside at 318 Lincolnway West, New Oxford.

The bride is a graduate of New Oxford High School with the class of 1957. The groom attended Delone Catholic High School and is employed by Paul Wagner, Inc., New Oxford.

Dunlap—Seville

Miss Janet Louise Seville, daughter of Mr. and Mrs. Willis Seville, Chambersburg R. 4, and Vaughn James Dunlap, son of Mr. and Mrs. Harry Dunlap, Biglerville R. 1, were married January 1 at 2 p.m. in the Wenksville Methodist Church. The Rev. Norman Marden performed the double ring ceremony. Mrs. Kathryn Tuckey was the organist.

The bride is a graduate of Chambersburg Area High School with the class of 1958 and was employed by the H. J. Heinz Co. in Chambersburg.

The groom is a graduate of Biglerville High School with the class of 1953 and is engaged in farming with his father.

The couple is residing at the home of the groom in Biglerville.

Rohrbaugh—Walker

Miss Helen L. Walker, daughter of Mr. and Mrs. Melvin A. Walker, near East Berlin, and Larry Rohrbaugh, son of Mr. and Mrs. Wilford Rohrbaugh, Hanover R. 5, were married recently in St. John's Lutheran Church, Abbottstown.

The bride is a senior at New Oxford High School. Rohrbaugh is employed by a Hanover metal industry. The couple will reside near Maple Grove Chapel.

Baugher—Schildt

Miss Jane Carol Schildt, daughter of the Rev. and Mrs. Ralph E. Schildt, Taneytown R. 1, Md., and Kenneth Howard Baugher, son of Mrs. Bernadette Grove, Hanover R. 5, and the late Howard J. Baugher, were married recently in the Beaver Creek Church of the Brethren, near Abbottstown, in a ceremony performed by the bride's father.

The bridal attendants were Miss Elaine Lucabaugh, Hanover R. 5, maid of honor, and the bride's sister, Miss Charlene Schildt, bridesmaid. Brenda and Lois Schildt, Spring Grove, cousins of the bride, were flower girls. James Baugher, Thomasville, was best man. Ushers were Jerry Sellers, Spring Grove, and Owen Sipe, Dover.

The newly-married couple will reside at York R. 6.

POLICE DROP MISSING GIRL CASE IN PARIS

ANTWERP, Belgium (AP) — Missing heiress Gamble Benedict today was traced to Paris after a freighter trip from New York with a married, Romanian-born chauffeur.

New York police said the 18-year-old New York debutante sailed from New York Dec 31 aboard the freighter Edga with Andre Porumbeanu, 35, onetime chauffeur-butler for Mrs Arde Bulova, widow of the watch king.

The freighter arrived in Antwerp Saturday. Both Miss Benedict and Porumbeanu remained aboard Saturday night, sources in Antwerp said.

Train To Paris

Sunday afternoon Miss Benedict boarded an express train which got to Paris late in the afternoon.

It could not be learned immediately whether she remained in the French capital When they sailed from New York, she had listed Naples as her destination and Porumbeanu gave Paris as his, New York authorities said

Police said they are closing the case since they are satisfied Miss Benedict voluntarily left her fashionable upper East Side home Dec. 27 after a society party. Friends had reported seeing her several times in New York since then.

Grandmother Objected

Her grandmother, Katherine Geddes Benedict, who is under a physician's care, reported the girl missing Friends said Mrs. Benedict, widow of Henry Harper Benedict, former president of the Remington Typewriter Co , had objected to the girl's seeing Porumbeanu, whom she met last summer at Mrs. Bulova's Long Island home.

Police said the break in the case came when an official of the Cosmopolitan Shipping Co. reported the couple had sailed on the Edga. The official said Miss Benedict and Porumbeanu occupied separate cabins during the 10-day crossing.

Fairfield

MRS. CLARENCE WILSON
Telephone 6

FAIRFIELD — The Fairfield-Orrtanna Homemakers will meet Thursday afternoon at 1 o'clock at the home of Mrs. J. Warren Martin. "Time and Energy-saving Kitchens" will be discussed.

James Musselman has returned to the Florida Southern College after spending the holiday vacation with his mother, Mrs. P. C. Musselman. Other guests at the Musselman home recently were: Mr. and Mrs. Paul B. Konx and family, Capt and Mrs. Roland Hess and family, Westport, N. J.; Mr. and Mrs. Robert Musselman and family, Lewistown; Dr. and Mrs. Fred Clemens and family, Berwick, Mr. and Mrs. Richard Irvin and family, Lemoyne, and Mr. and Mrs. Jack Cromwell and family, Norristown.

Tab Brown, 10-month-old son of Mr. and Mrs. Thomas Brown, Dodge City, Kan., formerly of Fairfield, and grandson of Mr. and Mrs. Harold Brown, is improved following a serious illness at the home of his grandparents in Lewistown. Mr. and Mrs. Brown and Tab had arrived in Lewistown to spend the holidays when the child was stricken. Mr. and Mrs. Harold Brown visited their grandson Friday.

Mrs. Preston Weikert has returned home from York where she was called due to the illness of her brother-in-law and sister, Mr. and Mrs. Sterling Dutterer. Mrs. Dutterer is the former Miss Ethel Wortz.

Lori Ann, infant daughter of Mr. and Mrs. Edward Kane, received the sacrament of baptism in St. Mary's Church Sunday afternoon administered by the pastor, the Rev. John McAnulty. Mrs. Kane is the former Nancy Weikert, daughter of Mr. and Mrs. Frank Weikert.

Mr. and Mrs. Galen Mohler and family have moved from the J. Warren Martin property, Main St., to the Philip Harbaugh home which they recently purchased.

ADVERTISE IN THE TIMES

Littlestown

OFFICERS FOR ST. JOHN'S ARE NAMED SUNDAY

A congregational meeting was held, and the annual memorial service conducted during the worship service Sunday in St John's Lutheran Church New members to serve on the church Council, elected by the congregation, include W. E. Stites, Kenneth Bortner, James Dattera and John Morehead The three year terms of the following expire, Dale W Starry Wilson P Greene, Preston L Myers and Sterling J Wisotzkey Financial reports were given and the 1960 budget was adopted

The annual memorial service for all members of the church who died during the past year, was conducted in charge of the pastor, the Rev. William C. Karns.

Raymond Remaman, Sterling Wisotzkey Edgar DeCroft and Samuel Harman served as ushers The Rev Mr Karns delivered a sermon on the subject "The Test of True Religion" The Golden Deeds Class placed the altar flowers

List Activities

Activities scheduled at St John's Church include Tonight, 7:30 o'clock, Brotherhood meeting at the church, when the guest speaker will be the Rev Lawrence Roller, pastor of St Paul's Lutheran Church Tuesday 7:30 p.m., meeting of the Ever Willing Class at the church, when the January hostess will be Mrs Ruthanna Starner Wednesday, 6:30 p.m., Junior Choir rehearsal, 7:30 p.m., Senior Choir rehearsal Thursday, 7:30 p.m., meeting of the Adams County Council of Churches at St. James' Lutheran Church, Gettysburg. Those who have been delegated to represent the congregation are Paul E King, Mrs Harry W Badders, Miss Shirley Leister and Glenn E. Unger. Next Sunday, at the 10:15 a.m. worship service, there will be installation of the newly elected Sunday school officers and teachers and the new church councilmen. There will be a meeting of the Sunday School officers and teachers on Monday January 18, 7:30 p.m

Redeemer's News

In observance of the Universal Week of Prayer, the Rev Glenn Flinchbaugh, pastor, spoke on "Little Rooms Where New Worlds Are Made" at the worship service on Sunday morning in Redeemer's United Church of Christ The Senior Choir sang the anthem "Give Ear to My Words," Scholin, accompanied on the organ by Mrs Jay R Crouse. The altar flowers were placed in memory of Rudolph M. Garland.

This year's officers and teachers of the Sunday School were installed during the service A total of 154 members were enrolled in the Homewood Auxiliary as reported by Mrs Wilbur A. Bankert, chairman of the membership drive. Acknowledgment was given to Mr and Mrs Miles R Fasnacht Jr. for the new candlelighter-extinguisher, and to Dr and Mrs W. Richard Marshman for the Senior Choir anthem portfolios.

Redeemer's Ladies' Aid Society will meet Tuesday at 7:30 p.m. in the church social hall, when the hostess will be Mrs. Paul F. Crabbs Mrs. John Hilbert and Miss Blanche Troxell. The January session of the consistory will be held at the church on Wednesday, 7:30 p.m The choirs will rehearse on Thursday, Cherubs at 6:30 p.m., Juniors at 7 p.m and Seniors at 7:30 p.m

Christ Church News

A solo, "Voices of the Sky," was sung by Mrs. George W Motter during the worship service on Sunday morning in Christ United Church of Christ Clair E Arentz, Dennis E Hoff, Richard D. Sheely and William W Hilker served as ushers The sermon was delivered by the pastor, the Rev. G. Howard Koons The altar flowers were placed by the Altar Guild. The bulletins were presented by the children of Mr. and Mrs. David L. Messinger in honor of their 36th wedding anniversary. One new member Linda B. Gamble, was received from First Baptist Church, Scottsboro, Alabama.

Christ Church Choir will rehearse tomorrow evening at 7:30 o'clock The January session of the Consistory will be heard at 7:30 p.m. on Wednesday at the parsonage, E King St. Mrs. Orville C Sentz, E Myrtle St., will be hostess to the Women's Guild for the monthly meeting on Wednesday, 7:30 p.m Mrs. Sentz will also be the program leader. The catechetical class will meet at the church on Saturday afternoon at 1:30 p.m and children of catechetical age are invited to attend.

Girl Scout News

Intermediate Girl Scout Troop 37 met Friday afternoon at Christ Lutheran Church parish house with 15 members and one guest, Elizabeth Mumaw, in attendance. The second class rank was read and discussed with the girls by Senior Aide Dolores Adams. Mrs. Gordon Webster, Gettysburg troop consultant, was introduced to the girls Cookie kits and instructions were distributed to the girls Leaders present were Mrs. William Bigham and Mrs. Rex Maddox.

MITCHELL IS OPTIMISTIC ON STEEL PRICES

DETROIT (AP)—The steel wage settlement is in line with others negotiated this year and cannot set off a wage spiral with highly inflationary effects, Secretary of Labor James P Mitchell said today

And there will be no steel price increases for some time to come if management and labor try to increase the rate of steel productivity Mitchell added He said he was sure both sides would make such an effort

Credit To Mitchell

Mitchell's comments were made in an address prepared for the Economic Club of Detroit

Mitchell, credited with playing a major role in last week's settlement of the 116-day steel strike, also said there may never again be a major steel strike in this country.

"With good will and good sense and with awareness that an economic institution like a steel corporation or a labor union must serve the public interest as fully as its own interests, it could be possible—on the basis of this settlement — that the United States will have seen its last major steel strike," Mitchell said

Mitchell said that in the new settlement the steel companies and the United Steelworkers Union have cut the postwar wage increase trend by half. He quoted Roger Blough, chairman of the board of U.S. Steel, as saying the average annual increase in hourly employment costs under the new terms will be 3½ to 3¾ per cent compared with other postwar settlements in which the increase averaged about 8 per cent

Mitchell said some news stories on the settlement created misunderstanding He said they did not take into account the fact that the steel settlement has been described in terms of total employment costs, while other major recent settlements have been described in terms of wages and benefits to workers

Employment costs also include such items as Social Security and unemployment compensation taxes paid by employers on the basis of their payrolls

"Thus," Mitchell said, "to say that the reported steel package of 39 cents is comparable to the reported aluminum package of 28.2 cents is not only untrue but meaningless. The steel package figure describes total employment costs to the companies; the other is a description only of the wages and benefits received by employes."

Weather Forecast

Extended forecast for five-day period starting Tuesday, Jan. 12, and ending Saturday, Jan. 16.

Eastern Pennsylvania, eastern New York, Mid Atlantic States and Connecticut — Temperatures will average 3 to 5 degrees above normal in the north and five to eight degrees above normal in the south portion. Rather cold Tuesday followed by warmer Wednesday through Friday and then colder again Saturday. Rain in the south portion and rain or snow in the north portion, mostly on Thursday and Friday, will total ¼ to ½ inch.

Western New York, western Pennsylvania and West Virginia—Temperatures will average 5 to 10 degrees above normal. Mild in south and not as cold in north portion Tuesday. Warmer Wednesday and Thursday. Colder by Saturday. Scattered light precipitation at beginning of period, becoming more general (mostly as rain) Thursday and Friday, will total ½ to one inch.

BIRTHDAY CELEBRATION

Four generations were represented at the 90th birthday celebration of Mrs. William P. Weikert, McKnightstown, held at the Hotel Gettysburg, Saturday afternoon.

Mr. and Mrs. Paul Weikert, Bethesda, Md., were hosts for the occasion. Also present were the Weikerts' son and daughter-in-law, Mr. and Mrs. William Weikert, Towson, Md., and the couple's three children, Mary Ann, Robert and Caroline.

Mr. and Mrs. William G. Weaver and daughter, Patsy, friends of the family, were guests.

In eight football seasons, New York Giant halfback Frank Gifford has caught 241 forward passes.

HEAVYWEIGHT CHAMP GETS LEGAL ADVICE

NEW YORK (AP) — World heavyweight champion Ingemar Johansson is taking no chances of having his fingers burned twice.

"Absolutely nothing has been signed and absolutely nothing has been promised on my next fight," Johansson said today.

Johansson and his adviser, Edwin Ahlquish arrived Sunday night from Sweden and immediately went into a huddle with representatives from the attorney general's office

"It was just a preliminary conference," Johansson said. "I'm going to visit the attorney general Tuesday for some further talks and also see the New York State Athletic Commission."

Attorney General Louis J. Lefkowitz has been conducting an investigation into the promotion of the fight last June in which Johansson won the title from Floyd Patterson

In addition to conferring with boxing authorities Johansson will receive the Edward J Neil trophy from the Boxing Writers Assn. Thursday night as the outstanding fighter of 1959. The award is given annually in memory of the late Edward J. Neil, Associated Press sports writer, who was killed while acting as a correspondent during the civil war in Spain

DISTINGUISHED

(Continued From Page 1)

land, Harry F Byrd, Virginia; John A. Carroll, Colorado, and Kenneth B Keating, New York.

The six congressmen are James M Quigley, James E Van Zandt and Willard S Curtin of Pennsylvania, Edith Green, Oregon and Fred Schwengel, Iowa.

Other members of the advisory committee are V. C. Jones, Washington, D. C., of the Curtis Publishing Co. and the National Civil War Centennial Commission, and Major Gen. Milton A Reckord, Baltimore.

Donations to the association so far totals $10,115.35 Dr. Robert L. Bloom, secretary-treasury, reported. He said contributions are currently "coming in at about $90 to $100 per day," from announcements by Cliff Arquette.

Much of the meeting was devoted to the adoption of a constitution and bylaws for the organization and in other matters pertaining to the setting up of the campaign

HOLDS BOWLING LEAD

CHICAGO (AP) — Four participants crashed into the top ten in the $296,000 Petersen Bowling Classic over the weekend but none challenged leader Arnie Gross

Gross, who went into first place last week, has a total of 1627 in the tournament which carries a top prize of $25,000 and runs through June 26.

Don't Miss the ANNUAL SALE of HANES

Seamless Stockings at Tobey's

Save Up to $1.05 On Every Box

Monday, January 11, through Saturday, January 16

Shop and Save at

TOBEY'S

30 Baltimore Street Gettysburg, Pa.

Open Friday and Saturday Evenings Till 9 O'clock

YOU BE THE JUDGE ABOUT DRY CLEANING

Compare STEELE'S SANITONE DRY CLEANING with any other!

One trial is all you need. Your verdict is sure to be 100% in favor of Sanitone Dry Cleaning because it restores the look and feel of newness time after time. Try us and see.

STEELE'S LAUNDRY and DRY CLEANING

Phone Enterprise 1-3747

THE GETTYSBURG TIMES
(A Daily Newspaper)
18-20 Carlisle Street
Telephone ED 4-1131

Published at regular intervals on each weekday

Times and News Publishing Co
A Pennsylvania Corporation

President Samuel G Spangler
Manager .... Carl A Baum
Editor Paul L Roy

Non partisan in politics
Entered at the Postoffice at Gettysburg as second class matter under the Act of March 3 1879

SUBSCRIPTION RATES
One Week (By Carrier) 25 Cents
Three Months $3 25
Six Months $6 50
One Year $13 00
Single Copies ... Five Cents
By Mail .. Per Year $10 00
Six Months $5 00

Member of the Pennsylvania Newspaper Publishers' Association and the Interstate Advertising Managers Association

An Associated Press Newspaper
The Associated Press is entitled exclusively to the use for republication of all the local news printed in this newspaper as well as all AP news dispatches

National Advertising Representative Rothenburg Kimball, Inc New York Chicago Detroit Pittsburgh and Philadelphia

Out Of The Past

From the Files of the Star and Sentinel and The Gettysburg Times

ONE HUNDRED YEARS AGO

The following gentlemen were appointed last week by the Directors of the Alms-House Physician: Dr. H. S. Huber, counse, Wm. McClean: treasurer, J. B. Danner steward, Jacob Culp: clerk, D. Brinkerhoff.

• • •

The new county treasurer, Waybright Zeigler, Esq has given bond and entered upon his duties.

• • •

Rev. J. Martin, pastor of the Lutheran Congregation at York Springs, has accepted a call to Westminster Md., and will enter upon his duties sometime in the next month.

• • •

Painful Accident: On Tuesday week as Mr. Levi Pitzer of Franklin township was returning home from Gettysburg with his five-horse team, he met with a serious accident when within a half mile of his home. While in the act of mounting the saddle horse, by some means or other he slipped and was thrown under the wagon. One of the front wheels passed over his body and one of the hind wheels over his leg, breaking it between the ankle and knee. It was late in the evening and a freezing rain falling, which had rendered the ground slippery at the time. The horses went home with the wagon, and search was made for Mr. Pitzer. It was found that he had worked himself on his hands and knees to within a few rods of his house. We are pleased to learn that he is getting along as well as could be expected under the circumstances.

• • •

The Democratic Ladies of the Borough are now busily engaged in a FAIR which is to come off during the Court-week for the benefit of the "Citizens' Band." The late Fair for the benefit of the "People's Band" having prove 'a success' has induced an effort on the part of the others. We heartily wish them a pleasant and profitable time.

• • •

The German Lutherans of this place and neighborhood have it in contemplation to erect a church edifice and are about collecting subscriptions for the purpose. We hope they may succeed in their enterprise.

SEVENTY-FIVE YEARS AGO

Organized: Messrs Jeremiah T Hartze Abraham Sneely and Emanuel D. Keller the newly-elected county commissioners, assumed office yesterday. Messrs McIlhenny, Maten and Schwartz retiring. The new board organized by electing Mr Sheely President. Charles H. Ruff was reelected Secretary, George J Benner Counsel and Dr. H L Dien Physician at the jail. Andrew Utz was appointed janitor of the Court-house, to succeed ex-sheriff Klunk.

• • •

At a recent meeting of the congregation of the Presbyterian church of this place, Mr Calvin Hamilton; of this place Mr J. Harvey Cobean of Cumberland township and Mr John McAllister, of Freedom township were elected Ruling Elders of that church.

• • •

Bigler Items: As everyone knows how the weather has been the past week, we will say nothing about it.

Farmers will be glad to know the price of wheat is steadily advancing. Eighty cents per bushel is now being paid for real good red wheat.

George A. Retner accidentally fell out of a door on the second story of his warehouse last week and received injuries about the head, causing him to be confined to his bed. We learn that he is improving. His brother-Charles is now attending to his business at the warehouse.

A subscriber to this paper, of this place, says that he would be very thankful indeed to the person who took two crocks of packed sausages from his cellar a few weeks ago if they would return the empty crocks. He says he does **not care for the sausage, but** thinks it would be real kindness to leave the crocks at his gate some night before the moon rises. He says it will be perfectly safe to do so, as he does not keep a dog.

The Old Year passed out and the New came in very quietly with the exception of the boys in town, who think they must shoot the old year off; a practice which, we think, is not becoming of civilization or true manhood and should have been discontinued long ago.

Today's Talk

GETTING ON IN THE WORLD

Early in life I came across some books in my father's library that intrigued me. They were part of a series of "self-help" books. I read them and Samuel Smiles, author of most of them, became an influence that was outstanding to those who were reaching out for mental inspiration.

We never know from where we can hope to discover our choicest ideas and uplifting material. The first discovery of gold in America was by those who came upon it in California, sparkling in the sunlight before their feet!

Smiles emphasized the idea of thrift as did the first John D. Rockefeller Franklin, who has always stood alone among the great of this earth, was always urging people to save. I often think of that little card I saw in the Henry Ford Museum which read. "Help the Other Fellow", then, underneath, Mr. Ford had written the words "To help himself."

I never felt fully free until my home carried no mortgage. Before that I often passed the mortgagor on the street, but I felt like saying "There goes the one who owns me." Blessed is the nation that owns itself! And blessed is any man who walks around in his own home!

Tomorrow Mr. Adams will talk on the subject. "Reach Out for Tomorrow."

Protected 1960 by The George Matthew Adams Service

Just Folks

THE BLIZZARD

I like sunshine and skies of blue,
And roses blooming by the door,
I'm keen for pansies wet with dew,
But I also like the blizzard's roar;
And I don't object to a winter day
When a good old snow storm comes our way.

I like the trees with their gentle shade
When the sun is high and the days are warm,
And the song birds sing their serenade,
But I don't object to a good old storm;
And I hike along through the drifted snow
With a cheery face and a glad "Hello!"

I like good luck to come my way,
And I'm glad when fortune smiles on me;
Success can cheer me any day,
And I like the days when I'm trouble free;
But when blizzards come and things go wrong,
I'm blamed if I'm going to mope along.

Protected, 1960, by The George Matthew Adams Service

TODAY'S TALK

THE ALMANAC

January 12—Sun rises 7:22; sets 4:56
Moon sets 5:58 a.m.
January 13—Sun rises 7:21; sets 4:56
Moon rises in evening.
MOON PHASES
January 13—Full moon
January 21—Last quarter.

RECORD CROWD IS EXPECTED AT '60 FARM SHOW

HARRISBURG (AP) — The 1960 Pennsylvania Farm Show opened today with advance billing as one of the biggest and best in the exposition's 44-year-history.

Farm show officials look for a new attendance record. Dr. William L. Henning, Farm Show Commission chairman and state agriculture secretary, predicted "only bad weather can hold the crowds back this year."

Henning made his comment Sunday night as he accompanied Gov. Lawrence cabinet members and other invited guests on a preview of the massive exposition.

Among the highlights of the tour was an impromptu cow milking demonstration by the governor who had never milked a cow before.

Lawrence sat down to begin the operation, and promptly fell off the stool—to the consternation of all but accompanying photographers.

With only his dignity hurt the governor remounted. "I didn't have far to fall," he said.

Lawrence will formally open the five-day exposition tonight in the Farm Show Arena.

Although livestock judging began with the opening of the doors this morning, judging of some agricultural products started Sunday.

Robert Reitz, of Selinsgrove, Lehigh County, was named the potato grand champion on the basis of potatoes exhibited at the show. He also captured a similar 4-H Club award.

Paul D. Trimble, of Quarryville R. 1, Lancaster County, was 4-H corn club title winner for southeast Pennsylvania.

John Miller, of Greensburg, Westmoreland County, was winner for the remainder of the state. The winners were selected on the basis of ears of corn displayed at the show.

MANY POLICE FAIL IN TEST

HARRISBURG (AP) — About one-third of 1,043 state police troopers flunked a recent test for promotion to corporal.

Some of the troopers privately complained that the civil service-conducted examination was impractical. But their commissioner, Col. Frank G. McCartney, defended it as "very fair and comprehensive."

McCartney said no good purpose could be accomplished by disclosing the questions.

However, one state policeman, who asked not to be identified, said he was given 180 minutes to answer 180 questions — a few so difficult that it took five minutes just to read them.

Noncommissioned officers did better on the test. Out of 204 corporals taking a test to become sergeant, 191 passed. A total of 132 sergeants out of 147 passed the test for promotion to first sergeant and lieutenant and 17 out of 17 first sergeants taking the test for **promotion to lieutenant.**

Abbottstown

MRS. DELLA BUTT
Times Reporter

ABBOTTSTOWN — The borough council held its reorganization meeting Monday, January 4, at 7:30 p.m.

Newly-elected councilmen were: James Gross, John Shultz and Homer Hafer. They were sworn into office by Burgess Harry Crawford and Norman H. Moul, justice of the peace.

The council nominated Gilbert Zeigler and Stanley Ensminger, one of them to be elected by council to fill the unexpired term of Oscar Griffin, deceased. The council voted in favor of Stanley Ensminger.

Wilmer Rodger was chosen president and conducted the remainder of the meeting. It was decided to hold regular meetings of the council the third Wednesday of each month at 7:30 p.m. in the borough office.

President Rodgers appointed the following committee: Light committee, James Gross, Stanley Ensminger and Paul Lookingbill; street committee, George Lillich, Homer Hafer and John Shultz; road supervisor, George Lillich; ordinance committee, James Gross, Paul Lookingbill and George Lillich; borough engineer, G Morrell Wildasin; borough solicitor, Attorney Charles Wolf; borough secretary, Bernard H. Anthony; borough treasurer, **Abbottstown State Bank, and** police chief, John H. Bechtel Jr. The council set a tax rate at nine mills and the meeting was adjourned.

The Altar Guild of St. John's Lutheran Church will meet Monday evening at 7:30 p.m. at the home of Mrs. Bernard Anthony.

A surprise birthday party was held in St. John's parish hall Thursday evening in honor of two cousins who celebrated their **sixteenth birthday. They were:**

Monday, January 11

	WRCA 660k	WOR 710k	WABC 770k	WNYC 830k	WCBS 880k	WGHQ 920k, WVIP 1310k, WVOX 1460k
6:00 6:15 6:30 6:45	Up to the Minute, Ken Banghart, 6:40 Wall Street, Three-Star Extra	News, Lyle Van, News John Wingate, Henry Gladstone, Sports, Stan Lomax	News Martin Block, Howard Cosell, News, John Daly, Let's Travel, news	Welfare Report, Speaking Volumes, Post Office, Weather; news	News, Van Voorhis, Sports, Bob Cooke, Jim McKay Show, Lowell Thomas	Herald Tribune Radio Stations WVIP, Mt. Kisco; WFYI, Mineola & WGHQ, Saugerties; WVOX, New Rochelle, sign on at 6 a.m. daily. Quarter-hourly "Operation Early Bird" news starts 6 a.m., Mon.-Sat., weather reports, commentaries. Stations sign off daily at 4:45
7:00 7:15 7:30 7:45	Stereo Showcase, Wayne Howell, News of the World, Wayne Howell Show	Fulton Lewis jr., Gladstone; news, News Program, Carlton Fredericks	Edward P. Morgan, Ice Franklin, Fred Robbins, 7:55, news	Masterwork Hour: Victoria de los Angeles, soprano; Songs from Spanish Renaissance Period	News, Amos 'n' Andy Show, A. Griffith; Burns & Allen; Bob & Ray	
8:00 8:15 8:30 8:45	News, Wayne Howell Show, continued	News The World Today, Sports McCullough and Eliot	News, Fred Robbins Show, continued, 8:55, news	Superintendent of Schools Report	The World Tonight, Three Guesses, Musical quiz with Ed Joyce, emcee	
9:00 9:15 9:30 9:45	News, Melody in the Night, with Bob Haymes	News McCullough and Eliot, continued	News, Fred Robbins, cont'd, 9:55, news	2,000 Years of Music, with Leonard Altman, 9:55, news		
10:00 10:15 10:30 10:45	News Melody in the Night, continued	News Les Smith, McCullough and Eliot, continued	News Easy Listening, 10:55, news	FM—Chamber Music Time, 10:55, news	News; Dance Orchestra, Evelyn Tyner Trio, Eddie Layton Trio	
11:00 11:15 11:30 11:45	News Melody in the Night, continued	News Lyle Van, McCullough and Eliot, continued	News Quincy Howe, Clair Hutchins, The World of Tomorrow	FM—Critic's Choice, with Walter Stegman	News, Van Voorhis, Starlight Salute, Music 'til Dawn, cont. to 5:30 a.m.	

Tuesday, January 12

9:00 9:15 9:30 9:45	News Bill Cullen Show	News H Hennessey, Galen Drake Show	Breakfast Club, Don McNeill and the cast—variety show	Masterwork Hour: Mstislav Rostropovich, cellist	News, Arthur Godfrey Time, comedy and music	Studio in the Round—From a library of high-fidelity recordings
10:00 10:15 10:30 10:45	News Million Dollar Music, with Art Ford	News H Gladstone, Martha Deane Show, interviews	News, My True Story, 10:55, news	You & Your Health, News Summary	News Martha Wright Show	
11:00 11:15 11:30 11:45	News Million Dollar Music, with Art Ford, continued	News, P. Robinson, The McCanns at Home	Make Believe Ballroom with Martin Block, 11:55, news	Spoken Words, 11:55, news	News, House Party, Art Linkletter, Garry Moore Show, 11:40, Funny Side	Stars and Strings: Recorded popular and string arrangements
	AFTERNOON PROGRAMS					
Noon 12:15 12:30 12:45	News Ed Herlihy Show	News, John Scott, The Fitzgeralds	News Martin Block, cont'd, 12:55, news	Midday Symphony: Violin Concerto by Dvorak, 12:55, news	News Lou Adler, Lanny Ross Show, Helen Trent, Couple Next Door	Noon Communique: 60-minute news and feature presentation
1:00 1:15 1:30 1:45	News Ed Herlihy Show, continued	News P. Robinson, Carlton Fredericks	News Dick Shepard Show, 1:55, news	Famous Artists, Virgil Fox, French Press, Weather, Alarm	Whispering Streets, Ma Perkins, Young Dr. Malone, Second Mrs. Burton	Keyboard—Piano artistry in varied moods for pleasant listening
2:00 2:15 2:30 2:45	News Jim Lowe Show	News Les Smith, Galen Drake Show	News Dick Shepard cont'd, 2:55, news	Adventures in Music, People and Ideas, Lee Graham	Right to Happiness, Just Entertainment, Allen Gray Show	Box Office: A review of the best-liked songs from B'way hits
3:00 3:15 3:30 3:45	News Jim Lowe Show, continued	News Lyle Van, Martha Rountree's Capitol Closeup	News Dick Shepard Show, continued, 3:55, news	Music From the Campus, Stock Exchange, 3:55, news	News, Freeman and Hayes	Studio in the Round: Afternoon edition of the morning program
4:00 4:15 4:30 4:45	News Art Ford Show	News John Wingate, Radio New York, hi-fi music, Jim Coy, host	News Martin Block Show, 4:55, news	Critic's Choice, with Walter Stegman	News Dick Noel Show	Communique, news survey; Stations conclude their broadcasting day at sunset
5:00 5:15 5:30 5:45	News Art Ford Show, continued	News, John Scott, Radio New York, continued, Jim Coy, host	News Martin Block, continued, 5:55, news	Music from the Theater, Gypsy Baron, Reserve News	News, Dick Noel Show, continued	
	EVENING PROGRAMS					
6:00 6:15 6:30 6:45	Up to the Minute, Ken Banghart, 6:40 Wall Street, Three Star Extra	News Lyle Van, News, John Wingate, News H. Gladstone, Sports, Stan Lomax	News, Martin Block, Howard Cosell, John Daly, news, Let's Travel, news	American Forum of the Air, Health Reports, Weather; news	News, Van Voorhis, Sports, Bob Cooke, Jim McKay Show, Lowell Thomas	Herald Tribune Radio Stations WVIP, Mt. Kisco; WGHQ, Saugerties, WFYI, Mineola, & WVOX, New Rochelle, sign on at 6 a.m. daily. Quarter hourly "Operation Early Bird" news starts 6 a.m., Mon.-Sat., weather reports, commentaries. Stations sign off daily at 4:45
7:00 7:15 7:30 7:45	Stereo Showcase, Wayne Howell, News of the World, Wayne Howell Show	Fulton Lewis jr., Gladstone, news, News Programs, Carlton Fredericks	Edward P. Morgan, Ice Franklin, Fred Robbins, 7:55, news	Masterwork Hour: Mstislav Rostropovich, cellist	News, Amos 'n' Andy Music Hall, A. Griffith, Burns & Allen, Bob & Ray	
8:00 8:15 8:30 8:45	News, Wayne Howell Show, continued	News, The World Today, Sports McCullough and Eliot	News: Fred Robbins, cont'd, 8:55, news	N Y U Readers' Almanac, news	The World Tonight, Three Guesses, musical quiz, with Ed Joyce, emcee	
9:00 9:15 9:30 9:45	News, Melody in the Night with Bob Haymes	News, McCullough and Eliot, continued	News Fred Robbins, cont'd, 9:55, news	New York Philharmonic Hour, with James Lyons, 9:55, news		
10:00 10:15 10:30 10:45	News, Melody in the Night, continued	News, Les Smith, McCullough and Eliot, continued	News Easy Listening, 10:55, news	FM—Chamber Music Time, 10:55, news	News, Dance Orchestra, Evalyn Tyner Trio, Eddie Layton Trio	
11:00 11:15 11:30 11:45	News, Melody in the Night, continued	News, Lyle Van, McCullough and Eliot, continued	News, Quincy Howe, Clair Hutchins, The World of Tomorrow	FM—Critic's Choice, with Walter Stegman, 11:55, news	News, Van Voorhis, Starlight Salute, Music 'til Dawn, cont. to 5:30 a.m.	

Wednesday, January 13

9:00 9:15 9:30 9:45	News Bill Cullen Show	News H Hennessey, Galen Drake Show	Breakfast Club, Don McNeill and the cast—variety show	Masterwork Hour: Norwegian Composers—Symphony No. 2 by Brustad	News, Arthur Godfrey Time, comedy and music	Studio in the Round—From a library of high-fidelity recordings
10:00 10:15 10:30 10:45	News Million Dollar Music, with Art Ford	News, H. Gladstone, Martha Deane Show, interviews	News, My True Story, 10:55, news	You & Your Health, News Summary	News, Martha Wright Show	
11:00 11:15 11:30 11:45	News, Million Dollar Music with Art Ford, continued	News, P. Robinson, The McCanns at Home	Make Believe Ballroom, with Martin Block, 11:55, news	Spoken Words, 11:55, news	News, House Party, Art Linkletter, Garry Moore Show, 11:40, Funny Side	Stars and Strings: Recorded popular and string arrangements
	AFTERNOON PROGRAMS					
Noon 12:15 12:30 12:45	News Ed Herlihy Show	News, John Scott, The Fitzgeralds	News, Martin Block, cont'd, 12:55, news	Midday Symphony, Concerto in G by Vivaldi, 12:55, news	News, Lou Adler, Lanny Ross Show, Helen Trent, Couple Next Door	Noon Communique: 60 minute news and feature presentation
1:00 1:15 1:30 1:45	News Ed Herlihy Show, continued	News, P. Robinson, Carlton Fredericks	News Dick Shepard Show, 1:55, news	Famous Artist, Frieda Hempel, Swedish Press, Weather; news	Whispering Streets, Ma Perkins, Young Dr. Malone, Second Mrs. Burton	Keyboard—Piano artistry in varied moods
2:00 2:15 2:30 2:45	News, Jim Lowe Show	News, Les Smith, Galen Drake Show	News, Dick Shepard cont'd, 2:55 news	Adventures in Music, For the Ladies, Peter Gravina	Right to Happiness, Just Entertainment, Allen Gray Show	Box Office: A review of the best-liked songs from B'way hits
3:00 3:15 3:30 3:45	News, Jim Lowe Show, continued	News, Lyle Van, Martha Rountree's Capitol Closeup	News, Dick Shepard Show, continued, 3:55, news	Chamber Music Time, Stock Exchange, 3:55, news	News; Freeman and Hayes	Studio in the Round: Afternoon edition of the morning program
4:00 4:15 4:30 4:45	News Art Ford Show	News, John Wingate, Radio New York, hi fi music, Jim Coy, host	News; Martin Block Show, 4:55, news	Critic's Choice, with Walter Stegman, 4:55, news	News; Dick Noel Show	Communique: news survey; Stations conclude their broadcasting day at sunset
5:00 5:15 5:30 5:45	News, Art Ford Show, continued	News, John Scott, Radio New York, continued, Jim Coy, host	News, Martin Block, continued, 5:55, news	Music from the Theater, Talk Me Along, Israeli Press	News, Dick Noel Show, continued	
	EVENING PROGRAMS					
6:00 6:15 6:30 6:45	Up to the Minute, Ken Banghart, 6:40 Wall Street, Three Star Extra	News, Lyle Van, News, John Wingate, Henry Gladstone, Sports, Stan Lomax	News Martin Block, Howard Cosell, News, John Daly, Let's Travel, news	Behind the Scenes in Music, Weather, news	News, Van Voorhis, Sports, Bob Cooke, Jim McKay Show, Lowell Thomas	Herald Tribune Radio Stations WVIP, Mt Kisco, WGHQ Saugerties, WFYI, Mineola & WVOX, New Rochelle, sign on at 6 a.m. daily. Quarter hourly "Operation Early Bird" news starts 6 a.m. Mon Sat, weather reports, commentaries. Stations sign off daily at 4:45
7:00 7:15 7:30 7:45	Stereo Showcase, Wayne Howell, News of the World, Wayne Howell Show	Fulton Lewis jr., Gladstone; news, News Program, Carlton Fredericks	News Ed P. Morgan, John Feeney Show, Fred Robbins, 7:55 news	Masterwork Hour, Norwegian Composers Symphony No. 2 by Brustad	News, Amos 'n' Andy Music Hall, A. Griffith, Burns & Allen; Bob & Ray	
8:00 8:15 8:30 8:45	News Wayne Howell Show, continued	News The World Today, Sports McCullough and Eliot	News Fred Robbins, cont'd, 8:55, news	Orchestra of America Concert from Carnegie Hall	The World Tonight, Three Guesses, Musical quiz with Ed Joyce, emcee	
9:00 9:15 9:30 9:45	News Melody in the Night with Bob Haymes	News, McCullough and Eliot, continued	News, Fred Robbins, cont'd	9:55, news		
10:00 10:15 10:30 10:45	News, Melody in the Night, continued	News, Les Smith, McCullough and Eliot, continued	News Easy Listening, 10:55 news	FM—Chamber Music Time, 10:55, news	News; Backgrounds of Literature, Dance Orchestra	
11:00 11:15 11:30 11:45	News, Melody in the Night, continued	News, Lyle Van, McCullough and Eliot, continued	News Quincy Howe, Clair Hutchins, The World of Tomorrow	FM—Critic's Choice, 11:55, News	News, Van Voorhis, Starlight Salute, Music 'til Dawn, cont. to 5:30 a.m.	

Thursday, January 14

	WRCA 660k	WOR 710k	WABC 770k	WNYC 830k	WCBS 880k	WGHQ 920k, WVIP 1310k
9:00 9:15 9:30 9:45	News; Bill Cullen Show	News, H. Hennessey, Galen Drake Show	Breakfast Club, Don McNeill and the cast—variety show	Masterwork Hour: Ignor Bezrodny, violinist; Symphony No. 3 in D minor by Bruckner	News, Arthur Godfrey Time, comedy and music	Studio in the Round—From a library of high-fidelity recordings
10:00 10:15 10:30 10:45	News; Million Dollar Music, with Art Ford	News, H. Gladstone, Martha Deane Show, interviews	News, My True Story, 10:55, news	You & Your Health, News Summary	News; Martha Wright Show	
11:00 11:15 11:30 11:45	News, Million Dollar Music, with Art Ford, continued	News, P. Robinson, The McCanns at Home	Make Believe Ballroom, with Martin Block, 11:55, news	Spoken Words, 11:55, news	News; House Party, Art Linkletter, Garry Moore Show, 11:40, Funny Side	Stars and Strings: Recorded popular and string arrangements
	AFTERNOON PROGRAMS					
Noon 12:15 12:30 12:45	News, Ed Herlihy Show	News, John Scott, The Fitzgeralds	News; Martin Block, cont'd, 12:55, news	Midday Symphony: Symphony No. 1 by Brahms, 12:55, news	News, Lou Adler, Lanny Ross Show, Helen Trent, Couple Next Door	Noon Communique: 60-minute news and feature presentation
1:00 1:15 1:30 1:45	News; Ed Herlihy Show, continued	News, P. Robinson, Carlton Fredericks	News: Dick Shepard Show, 1:55, news	Famous Artist: Boris Christoff, Back Fence, Weather; Alarm	Whispering Streets, Ma Perkins, Young Dr. Malone, Second Mrs. Burton	Keyboard—Piano artistry in varied moods
2:00 2:15 2:30 2:45	News; Jim Lowe Show	News, Les Smith, Galen Drake Show	News; Dick Shepard, cont'd, 2:55, news	Adventure in Music, People and ideas, 2:55, news	Right to Happiness, Just Entertainment, Allen Gray Show	Box Office: A review of the best-liked songs from B'way hits
3:00 3:15 3:30 3:45	News; Jim Lowe Show, continued	News, Lyle Van, Martha Rountree's Capitol Closeup	News: Dick Shepard, cont'd, 3:55, news	Young American Artist, Stock Exchange, 3:55, news	News, Freeman and Hayes	Studio in the Round: Afternoon edition of the morning program
4:00 4:15 4:30 4:45	News; Art Ford Show	News, John Wingate, Radio New York—hi-fi music, Jim Coy, host	News, Martin Block Show, 4:55, news	Critic's Choice, recorded music, Walter Stegman, 4:55, news	News; Dick Noel Show	Communique: news survey; Stations conclude their broadcasting day at sunset
5:00 5:15 5:30 5:45	News, Art Ford Show, continued	News, John Scott, Radio New York, continued, Jim Coy, host	News, Martin Block, continued, 5:55, news	Music From the Theater, Kurt Weill, Japanese Press	News Dick Noel Show, continued	
	EVENING PROGRAMS					
6:00 6:15 6:30 6:45	Up to the Minute, Ken Banghart, Bob Wilson, Three-Star Extra	News, Lyle Van, News, John Wingate, Henry Gladstone, Sports, Stan Lomax	News, Martin Block, Howard Cosell, News, John Daly, Let's Travel, news	Labor Press Conference, Veterans News, Weather; news	News, Van Voorhis, Sports, Bob Cooke, Jim McKay Show, Lowell Thomas	Herald Tribune Radio Stations WVIP, Mt. Kisco; WFYI, Mineola; WGHQ, Saugerties; WVOX, New Rochelle, sign on at 6 a.m. daily. Quarter-hourly "Operation Early Bird" news starts 6 a.m., Mon. Sat., weather reports, commentaries. Stations sign off daily at 4:45
7:00 7:15 7:30 7:45	Stereo Showcase, Wayne Howell, News of the World, Wayne Howell Show	Fulton Lewis jr., Gladstone, news, Business, news, Carlton Fredericks	Edward P. Morgan, Ice Franklin, Fred Robbins Show, 7:55, news	Masterwork Hour: Ignor Bezrodny, violinist; Symphony No. 3 in D minor by Bruckner	News, Amos 'n Andy Music Hall, Andy Griffith, Burns & Allen, Bob & Ray	
8:00 8:15 8:30 8:45	News, Wayne Howell Show, continued	News The World Today, Sports, McCullough and Eliot	News, Fred Robbins, cont'd, 8:55, news	Books in Profile, 8:55, news	The World Tonight, Three Guesses, Musical quiz with Ed Joyce, emcee	
9:00 9:15 9:30 9:45	News, Melody in the Night, with Bob Haymes	News, McCullough and Eliot, continued	News, Fred Robbins, cont'd, 9:55, news	Cooper Union Forum, 9:55, news		
10:00 10:15 10:30 10:45	News Melody in the Night, continued	News, Les Smith, McCullough and Eliot, continued	News, Easy Listening, 10:55, news	FM—Opera Night, with George Moushon, 10:55, news	News, Capitol Cloakroom, Dance Orchestra	
11:00 11:15 11:30 11:45	News, Melody in the Night, continued	News, Lyle Van, McCullough and Eliot, continued	News, Quincy Howe, Clair Hutchins, The World of Tomorrow	FM—Critic's Choice, with Walter Stegman, 11:55, news	News, Van Voorhis, Starlight Salute, Music 'Til Dawn, cont. to 5:30 a.m.	

Friday, January 15

9:00 9:15 9:30 9:45	News, Bill Cullen Show	News, H. Hennessey, Galen Drake Show	Breakfast Club, Don McNeill and the cast—variety show	Masterwork Hour: Brandenburg Concerto No. 4 by J. S. Bach	News; Arthur Godfrey Time, comedy and music	Studio in the Round—From a library of high-fidelity recordings
10:00 10:15 10:30 10:45	News Million-Dollar Music, with Art Ford	News, H Gladstone, Martha Deane Show, interviews	News My True Story, 10:55, News	You & Your Health, News Summary	News, Martha Wright Show	
11:00 11:15 11:30 11:45	News, Million-Dollar Music, with Art Ford, continued	News, P Robinson, The McCanns at Home	Make Believe Ballroom, with Martin Block, 11:55, news	Spoken Words, 11:55, news	News, House Party, Art Linkletter, Garry Moore Show, 11:40, Funny Side	Stars and Strings: Recorded popular and string arrangements
	AFTERNOON PROGRAMS					
Noon 12:15 12:30 12:45	News, Ed Herlihy Show	News, John Scott, The Fitzgeralds	News, Martin Block, cont'd, 12:55, news	Midday Symphony: Piano Concerto by Mozart, 12:55, news	News, Lou Adler, Lanny Ross Show, Helen Trent, Couple Next Door	Noon Communique: 60-minute news and feature presentation
1:00 1:15 1:30 1:45	News Ed Herlihy Show, continued	News, P. Robinson, Carlton Fredericks	News, Dick Shepard Show, 1:55, news	Famous Artists: Jan Smeterlin, Listening Post, Weather; Alarm	Whispering Streets, Ma Perkins, Young Dr. Malone, Second Mrs. Burton	Keyboard—Piano artistry in varied moods
2:00 2:15 2:30 2:45	News, Jim Lowe Show	News, Les Smith, Galen Drake Show	News, Dick Shepard, cont'd, 2:55, news	Adventures in Music, Reviewing Stand, 2:55, news; traffic	Right to Happiness, Just Entertainment, Allen Gray Show	Box Office: A review of the best liked songs from B'way hits
3:00 3:15 3:30 3:45	News, Jim Lowe Show, continued	News, Lyle Van, Martha Rountree's Capitol Closeup	News, Dick Shepard, cont'd, 3:55, news	Chamber Music Time, Stock Exchange, 3:55, news	News; Stan Freeman and Richard Hayes	Studio in the Round: Afternoon edition of the morning program
4:00 4:15 4:30 4:45	News, Art Ford Show	News, John Wingate, Radio New York—hi-fi music, Jim Coy, host	News; Martin Block Show, 4:55, news	Critic's Choice, recorded music, Walter Stegman, 4:55, news	News, Dick Noel Show	Communique news survey; Stations conclude their broadcasting day at sunset
5:00 5:15 5:30 5:45	News, Art Ford Show, continued	News, John Scott, Radio New York, continued, Jim Coy, host	News Martin Block, continued, 5:55, news	Music From the Theater: Sound of Music, German Press; news	News, Dick Noel Show, continued	
	EVENING PROGRAMS					
6:00 6:15 6:30 6:45	Up to the Minute, Ken Banghart, Jimmy Powers, Three Star Extra	News, Lyle Van, News, John Wingate, Henry Gladstone, Sports, Stan Lomax	News; Martin Block, Howard Cosell, News, John Daly, Let's Travel, news	International Interview, New York Sports, Weather; news	News, Van Voorhis, Sports, Bob Cooke, Jim McKay Show, Lowell Thomas	Herald Tribune Radio Stations WVIP, Mt Kisco; WGHQ, Saugerties, WFYI, Mineola & WVOX, New Rochelle, sign on at 6 a.m. daily. Quarter-hourly "Operation Early Bird" news starts 6 a.m., Mon. Sat., weather reports, commentaries. Stations sign off daily at 4.45
7:00 7:15 7:30 7:45	Stereo Showcase, Wayne Howell, News of the World, Wayne Howell Show	Fulton Lewis jr., Gladstone, news, News Program, Carlton Fredericks	Edward P. Morgan, Joe Franklin, Fred Robbins, 7:55, news	Masterwork Hour: Brandenburg Concerto No. 4 by J S Bach	News; Amos 'n' Andy Music Hall, A. Griffith; Burns & Allen, Bob & Ray	
8:00 8:15 8:30 8:45	News; Monitor	News; The World Today, Sports, McCullough and Eliot	News; Fred Robbins, cont'd, 8:55, news	Metropolitan Museum of Art Concert	The World Tonight, Three Guesses, Musical quiz with Ed Joyce, emcee	
9:00 9:15 9:30 9:45	News: Monitor, continued	News, McCullough and Eliot, continued	News: Fred Robbins, continued, 9:55, news	9:55, news		
10:00 10:15 10:30 10:45	Nineteenth Annual All Star Bowling Championships, from Omaha, Neb	News, Les Smith, McCullough and Eliot, continued	News; Easy Listening, 10:55, news	FM—Chamber Music Time, 10:55, news	News; The Leading Question, Jimmy Palmer Orchestra	
11:00 11:15 11:30 11:45	News Melody in the Night	News, Lyle Van, McCullough and Eliot, continued	News, Quincy Howe, Clair Hutchins, The World of Tomorrow	FM—Critic's Choice, with Walter Stegman, 11:55, news	News, Van Voorhis, Starlight Salute, Music 'til Dawn, cont. to 5:30 a.m.	

Saturday, January 16

9:00 9:15 9:30 9:45	News Bill Cullen Show	News, H Hennessey, Rambling with Gambling	News Al Lohman Show, 9:55, news	Masterwork Hour: Hans Richter-Hasser, pianist; Piano Concerto No. 2 in B Flat by Brahms	News, Jack Sterling Show	Studio in the Round—From a library of high-fidelity recordings
10:00 10:15 10:30 10:45	Monitor heard throughout the day from 8 a.m. until Sun. midnight	News, H. Gladstone, Jean Shepherd Show	News, Make Believe Ballroom, record show, with disk jockey	Young America Plays; news	News, Martha Wright	
11:00 11:15 11:30 11:45		News, H. Gladstone, Jean Shepherd Show, continued	Martin Block and his guests, 11:55, news	Trends in Israeli Music, 11:55, news	News, Martha Wright, continued	Stars and Strings Recorded popular and string arrangements
	AFTERNOON PROGRAMS					
Noon 12:15 12:30 12:45	Monitor, continued, Dave Garroway, Frank Blair	News, John Scott, Studio X Matinee, Sports, Studio X Matinee	News, Dick Shepard Show, 12:55 news	French Lyric Drama, 12:55, news	News Program, Lee Jordan Show	Keyboard—Piano artistry in varied moods
1:00 1:15 1:30 1:45	Ben Grauer, Mel Brandt, Ed Herlihy, Hugh Downs	Recorded popular music	News, Dick Shepard Show, continued, 1:55 news	Musicale, Delta Omicron, U.N. Report, Weather, news	News; World Concert Hall	News; Encore, recorded music
2:00 2:15 2:30 2:45	Johnny Andrews, Walter Kiernan, Monty Hall, Don Russell		News, Dick Shepard, cont'd, 2:55, news	International Music Festival	The Metropolitan Opera: Pelleas et Melisande by Debussy, Victoria de los Angeles, Theodor Uppman, George London, Giorgio Tozzi, Regina Resnik, Jean Morel, conductor	Box Office: A review of the best liked songs from B'way hits
3:00 3:15 3:30 3:45	Cope ham [illegible] communicators; feature news, sports, weather reports, music and recorded		News-Dick Shepard, cont'd, 3:55 news	3:55, news		Studio in the Round: Afternoon edition of the morning program
4:00 4:15 4:30 4:45		News, Music From a Chorus	News, Martin Block Show, 4:55, news	Everybody's Mountain, International Almanac; news		Modern Sounds, News Summary, Stations conclude their broadcasting day at sunset
5:00 5:15 5:30 5:45			News, Martin Block, continued, 5:55 news	French Drama Series, 5:55, news	Dick Noel Show	
	EVENING PROGRAMS					
6:00 6:15 6:30 6:45	News Program, Sports J Powers, News, Monitor, continued	News, Lyle Van, Moments in Music, News Chorus Music, Sports, Stan Lomax	News Martin Block, continued, Road to Health, Top Requests	Hands Across the Sea, Weather, news	News Program, Sports Show, Lee Jordan Show, 6:55, sports	Herald Tribune Radio Stations WVIP, Mt. Kisco; WGHQ Saugerties, WFYI, Mineola & WVOX, New Rochelle, sign on at 6 a.m. daily. Quarter-hourly "Operation Early Bird" news starts 6 a.m. Mon.-Sat., weather reports, commentaries. Stations sign off daily at 4:45
7:00 7:15 7:30 7:45	News Monitor, continued	News, Family Theater, drama, Word of Life	News, Fred Robbins Show, 7:55, news	Masterwork Hour: Hans Richter-Hasser, pianist; Piano Concerto No. 2 in B Flat by Brahms	News, Lee Jordan Show	
8:00 8:15 8:30 8:45		News, News Around the World, Sports, Your Nervous System	News; Fred Robbins, cont'd, 8:55, news	Queens Symphony Concert with Sarah Lawrence College Choir	The World Tonight, News, Sports, N. Y. Philharmonic Concert, James Fassett, Commentator	
9:00 9:15 9:30 9:45	News, Keep Dancing	News Music from Studio X	News, Fred Robbins, cont'd, 9:55 news	9:55, news		
10:00 10:15 10:30 10:45	Monitor, continued		News, Easy Listening, 10:55, news	FM—De Koven Presents: Baroque Music, 10:55, news	Vincent Lopez Orchestra	
11:00 11:15 11:30 11:45	News Program, Monitor, cont'd, News Program, Monitor, cont'd	News, Ed Pettitt, Music from Studio X, cont'd	Easy Listening, As We See It, World of Tomorrow	FM—Spoken Words, request program, 11:55, news	News, Stuart Metz, Perspective—U. N., Music 'til Dawn, cont. to 7:30 a.m.	

If enough of us help . . .

The S.S. Hope leaves for the Far East this year.
• Hope is a floating medical center
• Hope shares our health knowledge
• Hope helps others help themselves
• Hope adds skills, multiplies hands
• Hope multiplies dollars many times
• Hope makes friends for America

GIVE TO
HELP LAUNCH HOPE
Mail your dollars to HOPE, Box 9808, Washington 15, D.C.
Published as a public service in cooperation with The Advertising Council.

BAILEY NEW POTENTATE

Fuhrman F. Bailey, assistant superintendent of the public schools of Lancaster County, was elected potentate of Zembo Shrine Temple at the annual meeting, Friday.

Elected to serve with potentate Bailey for the coming year were the following members of Zembo Temple: Richard D. Wampler, chief rabban: Charles A. B. Heinze, assistant rabban; T. Dale Taylor, high priest and prophet: J. Edwin Weigle, oriental guide: Harry G. Harman, treasurer, and Robert A Wagner, recorder.

FUHRMAN F BAILEY

The new potentate is a graduate of Cross Roads High School, York Co.: Millersville State Teachers College; Franklin and Mrashall College and holds a Master's degree in Education from Columbia University.

He began his teaching career in a one-room school in York Co.; later served as principal of Jonestown High School, Lebanon Co., and as supervising principal of Warrick Township schools in Lancaster Co.: before assuming his present position He has been active in Boy Scout work for 30 years. He has also been an active member of the Lions Club for more than 20 years, serving as club president, district governor, and now is an international counsellor. He is a member of Zion's Lutheran Church, East Petersburg. He has taught Sunday School for many years, and has served on various executive committees in the Lutheran Theological Seminary here.

Bailey is married to the former Sarah Catherine Hoffman. They have three sons: Howard, of East Petersburg: Kenwyn, of Landisville, and Barth, now attending Millersville State Teachers College There are two granddaughters, Sharon and Linette. The Baileys reside at 78 Delp Rd., Lancaster.

NEW AF RECRUITER

T Sgt. James H. Wyland Sr., USAF, has been assigned as the Air Force recruiting representative for Adams County.

Miss Nancy Stambaugh, daughter of Mr. and Mrs. Ellis (Bill) Stambaugh, and Miss Susan Berkheimer, daughter of Mr. and Mrs. Robert Berkheimer.

Mr. and Mrs. Philip Aumen announced the birth of a son at the Warner Hospital.

REACTION TO NIXON MOVE IS "MIXED"

By JOE F. KANE

WASHINGTON (AP) — Vice President Richard M. Nixon's entry into the presidential race sparked both praise and criticism during the weekend.

Politicians were not at all hesitant in expressing their views not only on Nixon, but also on matters ranging from religion to missile tests and alleged executive misinformation.

Nixon became an acknowledged GOP candidate by consenting to have his name and delegate slates entered in three primaries. The announcement was made without fanfare by his press representative, Herbert G. Klein.

Considered A Cinch

The three primaries involved are in New Hampshire March 8, Ohio May 3 and Oregon May 20.

Nixon is considered a cinch for the nomination. New York's Gov Nelson A. Rockefeller said during the holidays he would not seek it, and no one else has appeared to challenge Nixon.

Sen. Everett M. Dirksen (R-Ill) the Senate Republican leader, said he wasn't surprised by what he called the agreeable news about Nixon. He added "we do believe we have a candidate who is a winner."

Appraisals Differ

Dirksen said Rockefeller had made a "very realistic and very practical" move in withdrawing.

Sen. Thruston B. Morton (R-Ky), Republican national chairman, said Nixon would be an "articulate, vigorous and tough candidate."

Democratic National Chairman Paul Butler had a different description. He termed Nixon a "shrewd, devious political operator."

The two chairmen agreed on one point. They told a television audience that religion will not be an important factor in the fall elections.

Democratic Picture

One of the announced contenders for the Democratic nomination is Sen. John F. Kennedy (D-Mass), a Roman Catholic who also has made it clear that he thinks religion should play no part in the consideration of candidates.

Kennedy's only announced opponent for the nomination so far is Sen. Hubert H. Humphrey (D-Minn). He was speech-making in the West during the weekend.

Humphrey said in an interview at Salt Lake City that the United Nations should supervise missile tests and that the United States should ask the U.N. to supervise underground nuclear tests.

CAR IS SMEARED

PHILADELPHIA (AP) — A 10-inch swastika drawn in crayon was found Sunday on a car parked in a mid-city garage.

The owner, Charles Schnoll, of Huntington Valley, said he discovered the Swastika after attending a Jewish fund-raising meeting.

BLAMES RED AGENTS

VALLEY FORGE, Pa (AP)—Maj. Gen. A. J. Drexel Biddle, Pennsylvania adjutant general, says the current wave of anti-Jewish vandalism was touched off by Communist agents.

"There is no doubt in my mind that the first match was struck by Communist agents as a part of a deliberate plan to discredit West Germany in the eyes of the west," Biddle said.

He spoke Sunday at the 37th annual observance of Pennsylvania Day.

Applications for enlistment in the Air Force are now being accepted. Sgt. Wyland will be at the post office building each Tuesday from 10 a.m. until 3 p.m. to discuss enlistment details with interested persons. His headquarters are at 126 N. Main St., Chambersburg.

Dr. D. L. Beegle
CHIROPRACTOR
EMMITSBURG, MD.
Phone Hillcrest 7-4631

PAUL and JAY WOODWARD
Roof Painting Roof Coating
Roofing • Siding • Shingles
Repairs
Phone ED 4-3416 or Write
696 S. Washington St.
Gettysburg, Pa.

Starts Wednesday
"THE MIRACLE"
STANLEY WARNER
MAJESTIC
GETTYSBURG · ED 4-2513

LAST DAY
Pat Boone James Mason
"JOURNEY TO THE CENTER OF THE EARTH"
Color • Features 7:00-9:29

TOMORROW ONLY
Features 7:00-9:33

THOMAS B. COSTAIN'S MIGHTY BEST-SELLER!
WARNER BROS. PRESENT THE SILVER CHALICE
A VICTOR SAVILLE PROD. IN CINEMASCOPE WARNERCOLOR STEREOPHONIC SOUND
VIRGINIA MAYO PIER ANGELI JACK PALANCE PAUL NEWMAN
WRITTEN FOR THE SCREEN BY LESSER SAMUELS ASSOCIATE PRODUCER
DIRECTED BY VICTOR SAVILLE • DISTRIBUTED BY WARNER BROS.

NewspaperARCHIVE.com

SPORTS

Bullets Blast Lehigh 75-59 In MAC Contest; At Dickinson Tuesday

Gettysburg College, one of the top shooting percentage teams in the country, hit on 51 per cent of the field goal tries and sent Lehigh down with its sixth straight loss by walloping the Engineers 75-59 Saturday evening before a capacityl crowd of 1,400 fans in Eddie Plank gym.

Coach Bob Hulton's Bullets are 4-6 on the season and 3-2 in Middle Atlantic Conference play. Lehigh now owns a 2-8 record and is 24 in league competition.

The Bullets ripped the cords for 36 of 70 shots from the field to maintain an outstanding .468 per cent in ten games. Ron Warner accounted for 13 of 23 while Bill Fitzkee and George Burnel each landed six for 10.

Gettysburg was behind only briefly throughout the entire game. After Ron Warner and Ken Weaver exchanged opening shots, Bob Happ connected on a jump and sophomore Norm Brandl added a pair of foul for Lehigh. George Burnett looped a jump and Warner drove in for a layup. Brandl and Weaver landed three quick goals to make the score 13-8 in favor of Lehigh.

Burnett registered a corner jump, Warner tapped a rebound, Burnet followed with a foul and Warner checked in with another jump. Brandl connected on a drive, Bill Fitzkee added a hook to the right and Jack Palfi dunked a jump to make the score 17-17 with 10.41 minutes remaining in the first half. This was the last time the Bullets were ever tied or behind. Bill Hemsing and Bob Parker scored jumps and Fitzkee added a pair of layups to put the home team in front 25-17.

Burnett, Warner and Parker rounded out the scoring for the Bullets during the remainder of the half and at intermission Gettysburg led 38-27.

Gettysburg held a nine-point lead during the first nine minutes of the second half, but from that point on the lead began to increase and was never cut.

Besides the spot substitution of Bruce Simpson, Hulton went through 38 minutes of the game with his first six men. During the last couple of minutes, he cleared his bench. Tony Packer, Lehigh coach, went the entire distance with his starting five.

While the Bullets hit on a good percentage of their goals, they also received considerable help from the rebounding of Bill Fitzkee, who grabbed 15 during the contest. The team netted 49 to Lehigh's 39 rebounds. Bob Parker was at his usual best in setting up the plays and sparking the defense.

Norm Brandl was top man with 28 points while Ron Warner recorded 27. Ken Weaver was runner up for the Engineers with 16 while George Burnett landed 14 and Bill Fitzkee and Bob Parker racked up 12 for the Bullets.

The Gettysburg freshman team fell behind 18-0 in the first five minutes and were completely outclassed as the Lehigh yearlings took an 80-48 decision in the preliminary contest. Lehigh led 44-18 at half. Bill Dosedlo landed 27 points for the visitors while teammate Gary Stolberg registered 20. Jack Russell was high for the Little Bullets with eight.

Gettysburg will travel to Carlisle Tuesday for a twin-bill with Dickinson. The freshman game will get underway at 6:45 p.m.

Leigh	G	F	P
Cullinan	1	0- 0	2
Weaver	8	0- 0	16
Palfi	4	1- 3	9
Brandl	11	6-10	28
Happ	2	0- 2	4
Totals	26	7-15	59
Gettysburg	**G**	**F**	**P**
Burnett	6	2- 5	14
Hemsing	2	0- 0	4
Fitzkee	6	0- 1	12
R. Warner	13	1- 1	27
Parker	6	0- 0	12
Simpson	2	0- 0	4
Little	1	0- 0	2
Bauer	0	0- 1	0
Totals	36	3- 8	75

Nonscorers: Gettysburg — Fleming, Roberts, Bainbridge.

Score by halves:		
Lehigh	27	32—59
Gettysburg	38	37—75

Officials: Lowell and Stricker.

Freshman Game

Lehigh	G	F	P
Usilton	6	3- 4	15
Tanis	6	0- 0	12
Dosedlo	12	3- 4	27
Stolberg	9	2- 2	20
Nieberle	1	0- 1	2
Milboilan	2	0- 0	4
Totals	36	8-11	80
Gettysburg	**G**	**F**	**P**
Wetherhold	3	0- 0	6
Ryan	2	0- 0	4
Pappas	0	1- 2	1
Hughes	2	0- 0	4
Giodek	2	0- 0	4
Gaeckler	1	0- 0	2
Koerner	3	1- 1	7
Frey	3	0- 2	6
Burke	0	1- 1	1
Russell	4	0- 3	8
Sanborn	2	1- 1	5
Totals	22	4-10	48

Nonscorers: Lehigh—Brush, Miller, Remig. Gettysburg—Fuller, Nyce.

Score by halves:		
Lehigh	44	36—80
Gettysburg	18	30—48

Officials: Thomas and Johns.

HOCKEY DEAL

DETROIT (AP) — The Detroit Red Wings today sent veteran Jack McIntyre to Hershey of the American Hockey League, and called up young Brian Smith to replace him.

McIntyre, used mostly on power plays and with a makeshift fourth line, had scored seven goals in 39 games.

MIDDLE ATLANTIC CONFERENCE

University Division

LaSalle	3	0	1.000
St. Joe's	1	0	1.000
Temple	5	1	.833
Gettysburg	3	2	.600
Lafayette	2	2	.500
Bucknell	2	2	.500
Rutgers	1	1	.500
Lehigh	2	4	.333
Muhlenberg	0	3	.000
Delaware	0	4	.000

Saturday's Scores

Gettysburg, 75; Lehigh, 15.
Temple, 82; Lafayette, 70.

Tuesday's Game

Lehigh at St. Joseph's.

Wednesday's Game

Muhlenberg at Lafayette.

Thursday's Game

Gettysburg at Delaware.

MOUNT DRUBS ROANOKE FOR 7TH STRAIGHT

Mt. St. Mary's (7-2) ran its winning streak to seven when it put on a strong finish to down winless Roanoke (0-7) 81-69 in a Mason-Dixon Conference game at Emmitsburg Saturday evening.

The game was close until the final six minutes of play when the Mountaineers broke the contest wide open.

After holding a scant 34-32 halftime lead, the Mount was held in check by the Maroons for 14 minutes of the last half. With six minutes left, Coach Jim Phelan's outfit led 63-60 but then a well-balanced attacked sent the Mount steadily to the front.

Jerry Savage was top point producer for the Mountaineers with 22 points, including 10 free throws in as many attempts. Dick Talley added 19, Jack Gunn 14, Mike Costello 11 and Mike Callahan 10. Ed Pfeiffer, the freshman ace, was held to but three points, the first time this season he was kept out of double figures.

Ronnie Simmons of Roanoke was high man for the game with 24. Morris Cregger added 16 for the losers.

The Mount plays at Randolph-Macon Tuesday evening and then follow with him engagements with Baltimore on Thursday and Loyola Saturday. All are conference games.

Roanoke	G	F	P
Clements	3	2- 3	8
Cregger	7	2- 9	16
Long	1	0- 0	2
Millhof	1	2- 2	4
Simmons	9	6- 8	24
Simonovich	6	1- 3	13
Tompkin	0	2- 2	2
Totals	27	15-27	69
Mt. St. Mary's	**G**	**F**	**P**
Gunn	6	2- 4	14
Talley	8	3- 4	19
Callahan	3	4- 5	10
Savage	8	10-10	22
Pfeiffer	1	1- 1	3
Samuels	0	2- 5	2
Costello	5	1- 2	11
Totals	29	23-31	81

Score by halves:		
Roanoke	32	37—69
Mt. St. Mary's	34	47—81

National Basketball Assn.

Eastern Division

	W.	L.	Pct.	G.B.
Philadelphia	27	11	.711	3½
Syracuse	24	16	.600	7½
New York	15	24	.385	16

Western Division

	W.	L.	Pct.	G.B.
St. Louis	22	15	.595	—
Detroit	15	28	.349	10
Minneapolis	13	26	.333	10
Cincinnati	13	32	.289	13

Saturday Results

Philadelphia 119, Syracuse 112
Boston 126, Detroit 103
Minneapolis 121, Cincinnati 91

Sunday Results

St. Louis 121, Boston 111
Syracuse 108, Detroit 103
Minneapolis 112, Cincinnati 106
Philadelphia 116, New York 103

Monday Schedule

No games

Tuesday Schedule

Boston vs. Syracuse at Philadelphia
St. Louis at Philadelphia
New York at Cincinnati

BISONS WIN 2 OVER WEEKEND

By THE ASSOCIATED PRESS

Phil Maloney is the man behind the Buffalo Bison's sudden surge toward the upper reaches of the American Hockey League.

Maloney sparked Buffalo to a pair of weekend victories that have the Bisons in fourth place today, only two points behind Rochester and six out of second place

The Bisons knocked off Cleveland 5-4 in overtime Saturday night as Maloney scored the winning goal and beat Hershey by the same score Sunday night.

In other weekend AHL games, league-leading Springfield lost to Providence 4-2 Sunday night after turning back Rochester 7-5 on Saturday. Rochester turned around and decisioned Quebec Sunday night, 7-2 after the Aces had also been blasted 8-1 by Hershey on Saturday.

Maloney's two goals Sunday night gave Buffalo 2-1, and 3-2 leads and the assist on Wally Hergesheimer's goal helped put the Bisons in front for good. Brian Smith scored twice for Hershey.

THIS WEEK'S SPORTS

BASKETBALL

Tuesday

Gettysburg at Dickinson, also freshmen.
Delone at Lancaster Catholic.
Biglerville at Chambersburg.
Biglerville Junior High at Faust.
Fairfield at New Oxford.
Littlestown at Scotland.
Mt. St. Mary's at Randolph-Macon.

Wednesday

Gettysburg at Delaware, swimming.
Delone Frosh at Southwestern jayvees.

Thursday

Gettysburg at Delaware.
Gettysburg at F. and M., wrestling.
Biglerville at West York, wrestling.
Baltimore at Mt. St. Mary's.

Friday

Carlisle at Gettysburg.
St. Edward's at Delone.
New Oxford at Littlestown.
Bermudian at Greencastle.
Quincy at Fairfield.

Saturday

Scranton at Gettysburg.
York Junior College at Gettysburg freshmen.
Bucknell at Gettysburg, swimming.
Elizabethtown at Gettysburg, wrestling.
Loyola at Mt. St. Mary's.

CANNON, LUCAS LEAD ROUT OF WEST BY 34-8

HONOLULU (AP) — Sunday's 14th annual Hula Bowl might well have been called the Cannon-Lucas affair.

For All-America Billy Cannon of Louisiana State and Penn State's Richie Lucas accounted for four of the East college all-stars' five touchdowns in the 34-8 rout of the West.

Cannon scored three touchdowns, one on a pass from Lucas. Lucas — voted the games' outstanding player — pitched another paydirt pass to Mississippi's Larry Grantham, voted the outstanding lineman.

The 23-year-old Cannon, the nation's top professional draft choice, opened the scoring with a 59-yard punt return in the first period. Lucas' 11-yard touchdown pass to Grantham midway in the period followed by a 12-yard paydirt throw to Cannon late in the quarter.

The West, ragged in the line and able to gain only 15 yards rushing, scored in the second period after California's Pete Demoto intercepted a Lucas pass on the East 38 and ran it back to the 4. Fullback Jack Spikes of Texas Christian skirted left end for the touchdown.

WEGEMAN WINS SKI TOURNEY

EAU CLAIRE, Wis. (AP) — Keith Wegeman of Hollywood, Calif., a member of the U.S. Olympic ski jumping training squad, today won the 17th annual Eau Claire Ski Club tournament.

Wegeman, a member of the 1952 Olympic team, had leaps of 181 and 182 feet for 228.0 points.

A total of nine of the first ten places in senior class jumping were captured by Olympic hopefuls.

Ansten Samuelstuen of Steamboat Springs, Colo., was runner-up on leaps of 168 and 181 for 221.3 points. Gene Kotlarek of Duluth, Minn., was third. He soared 165 and 177 feet for 220.3.

Bob Wedin of Iron Mountain, Mich., won the junior class competition as an Olympic trainer with jumps of 176 and 175 for 220.1.

About 9,000 persons watched the riders perform. The damp weather slowed the hill and prevented skiers from breaking the record of 197 feet set by Kotlarek and Ted Lahner of Eau Claire last year.

Duquesne Mentor Scores Officiating

PITTSBURGH (AP)—Duquesne Coach Red Manning believes visiting teams are given the edge by basketball officials in Pittsburgh.

"I would prefer to be a visiting team coming here to play," Manning asserted Sunday night. "In most cities the home team seems to have the edge but not here."

Manning's comment was touched off by Duquesne's 68-65 loss to Lasalle Saturday night in Pitt's Field House. He said he was "definitely dissatisfied" with the officating.

"I watched the Lasalle-Canisius game in Philadelphia last week and it was disgraceful," Manning added. "The two Philadelphia officals kept calling fouls on Canisius."

TOMMY BOLT ASSAILED BY AFRICAN PRESS

JOHANNESBURG, South Africa (AP)—"The worst mannered golfer ever to visit the Union," cried the Johannesburg Express today on shocked tones.

Tommy Bolt, the hot-tempered U.S. Open champion from Crystal River, Fla., was the object of the Express' wrath.

Bolt won a challenge series against South African Gary Player, the British Open champion, a couple of weeks ago.

The Express demanded the South African Golfers Union make an official complaint to the U.S. Professional Golfers Assn for Bolt's "appalling behavior."

Cursed Official

The Express objected mostly to Bolt's salty language. It claimed he cursed one official who offered him a cool drink.

In another match, complained the Express, an official took a look at Bolt's lie in the rough and Tommy yelled to Player: "Say, Gary, call this imbecile off."

Continued the Express:

"It is safe to say that at each and every course on which Bolt played, he insulted at least one official. Frequently Player had to apologize for his manners.

Made So Many Enemies

"Never on one sports field has one man made so many enemies in so short a time."

But Tommy had some supporters.

Sid Brewer, president of the South African Professional Golfers Union, shrugged it off.

"Tommy gave color to the game here even if he splashed it on rather heavily at times," he observed.

He's On Probation

Bobby Locke, another South African ace and four times holder of the British Open, told the Sunday Times that Player lost the series because of Bolt's "psychological treatment."

"When you play many of the Yanks, you've got to switch off your hearing aid," Locke remarked dryly.

At the moment, Bolt is on an indefinite probation by the U.S. PGA for his frequent outbursts. However, of late, he has been on his best behavior and has refrained from his old habits of tossing clubs and arguing with spectators.

College Basketball Saturday Results

EAST

Brown 79, Princeton 61
Yale 67, Penn 57
Cornell 81, Harvard 57
Dartmouth 84, Columbia 78
Seton Hall 89, St. Joseph's (Pa) 88
LaSalle 68, Duquesne 65
West Virginia 75, Penn State 73
Dayton 73, Canisius 63
Syracuse 85, Pitt 77
Villanova 74, Muhlenberg 46
NYU 69, Navy 61
Army 74, Fordham 59
Boston U 72, Colby 62
Holy Cross 52, Connecticut 49
Rhode Island 83, Vermont 75
Temple 82, Lafayette 70
Colgate 78, Rutgers 74

SOUTH

Kentucky 77, LSU 45
North Carolina 74, Virginia 70
Georgia Tech 82, Miss. State 60
WM & Mary 90, Richmond 76
Tulane 61, Tennessee 56
Furman 64, Davidson 59
Auburn 73, Florida 69
Vanderbilt 66, Mississippi 58
Georgia 70, Alabama 58

MIDWEST

Cincinnati 83, Tulsa 50
Michigan State 89, Michigan 58
Illinois 90, Minnesota 82
Ohio State 96, Indiana 95
Iowa 73, Northwestern 59
Purdue 99, Wisconsin 69
St. Louis 75, North Texas 65
Kansas State 65, Missouri 60
Bradley 71, Wichita 70
Houston 56, Drake 55
Kansas 60, Nebraska 47
Iowa State 49, Oklahoma St. 46
Notre Dame 75, Detroit 63
Marquette 61, Louisville 57

SOUTHWEST

Texas A&M 65, TCU 52
SMU 49, Texas Tech 44
Arkansas 90, Baylor 83 (2 ot)
Texas 52, Rice 50
New Mexico St. 70, Arizona 53
Arizona State College 74, St. Michael (NM) 54
Arizona State U. 84, Texas Western 63

FAR WEST

California 52, Stanford 43
Southern California 69, Washington 68
Seattle 98, Portland 70
Denver 74, Wyoming 62
Colorado State Univ. 83, New Mexico 67
Utah State 73, Utah 61
BYU 63, Montana 58
Air Force 63, Loyola (Chicago) 50
Idaho 56, Montala State 45
Oregon 68, Wash. State 64

National Hockey League

By THE ASSOCIATED PRESS

Saturday Results

Montreal 2, Chicago 1
Boston 3, Toronto 2
Detroit 3, New York 3 (tie)

Sunday Results

Chicago 3, Montreal 0
Boston 4, Toronto 0
New York 4, Detroit 3

Monday Schedule

No games
No games

Tuesday Schedule

ADVERTISE IN THE TIMES

Frick Leaves To Talk To Keating

By JACK CLARY
Associated Press Sports Writer

NEW YORK (AP) — Baseball Commissioner Ford Frick leaves today for talks with Sen. Kenneth B. Keating (R-NY) concerning the relationship of the embryonic Continental Baseball League and the present baseball structure, major and minor.

Frick's jaunt to the nation's capital was necessitated by one made last week by Continental officials Branch Rickey and Bill Shea when they talked with Keating of the troubles they have encountered in getting their league started.

After Keating offered to act as an informal mediator between the American and National leagues, and the Continental, He also indicated strongly that he favored starting the new league.

Frick was spurred to action by the mediation offer, for which he sees no use at this time and will presumably so tell Keating.

SUBSTITUTIONS BIG ISSUE OF RULES GROUP

MIAMI BEACH, Fla. (AP) — Whether or not 22 men again will trot on or off a college football field when the ball changes hands is being decided by a small group of men assembled here today.

The National Collegiate Athletic Assn. rules committee opened its three-day deliberations, beset by the problem of trying to please two factions directly opposed in the substitution debate.

The coaches, eager for more manpower, are on record as favoring a return to free substitution.

The NCAA, the "brass" of college athletics and the policing body which last week in New York slapped suspensions on Oklahoma and Tulsa, recommends that the rules makers ignore the wishes of the men who teach the game in favor of a status quo.

Plan Thorough Study

Whatever the rules makers decide, their director said, it will be a decision based on a thorough study of proposals and arrived at with an open mind.

"The committee will give thorough consideration to any suggested rule changes," General Robert R. Neyland, chairman said. "The committee will receive the report of the subcommittee rule changes, and then go over the suggestions."

The subcommittee is made up of Ray Eliot, Wally Butts and David M. Nelson. Butts and Eliot were retired as district representatives effective Jan. 1, and were replaced by Wallace Wade and Ivy Williamson, respectively.

WARRIORS GAIN ON CELTICS IN DOUBLE WIN

By THE ASSOCIATED PRESS

If the Philadelphia Warriors want to grab that National Basketball Assn. eastern division title this is the week to get to work.

The Warriors trail the division leading Boston Celtics by 3½ games after winning twice over the weekend while Boston split a pair. The two clubs have four games scheduled this week, including a pair against each other.

The Celtics have lost 5 of their last 7 games since tying the all-time NBA winning string of 17. To add to their woes, Bill Russell, their great center, came up with a sprained ankle in a 121-111 loss to the St. Louis Hawks Sunday.

Russell will have the ankle X-rayed in Philadelphia today to determine the extent of the injury. He missed only three minutes of Sunday's game after Chuck Share fell on him in a first period scramble for the ball.

Beat N. Y. Sunday

The Warriors came on fast in the final quarter to beat New York 116-103 Sunday night. Wilt Chamberlain scored 48 points Saturday to help Philadelphia to a 119-112 victory over Syracuse.

Wilt scored 35 Sunday night, two in an 8-point splurge that broke the Knicks early in the final period. Charley Tyra paced New York with 25 points.

Bob Pettit's 39 points were too much for the Celtics as the western division leaders, trailing only momentarily in the second period, picked up momentum and led by as many as 18 during the second half. Tom Heinsohn led Boston with 29 points. The Celts beat Detroit 126-103 on Saturday.

Syracuse Wins

The Minneapolis Lakers, only six percentage points behind second place Detroit in the west, swept a weekend series with Cincinnati, winning 121-91 Saturday and 112-106 Sunday.

Cincinnati's Jack Twyman scored 29 points before fouling out with a little more than 3 minutes to play Sunday, and had helped the Royals to a 102-99 lead. From there the Lakers eased in front to stay. Larry Foust topped Minneapolis with 30 points.

Syracuse defeated Detroit 108-103 in Sunday's other game. George Yardley scored 15 of his 27 points in the third period to stake the Nats to a lead they never lost. He missed the fourth period with a pulled ankle but still led all scorers. Archie Dees had 19 for Detroit.

LOYOLA SINKS BULLET SWIM SQUAD 61-33

The Loyola Greyhounds handed Coach Gene Hummel and his Gettysburg College swimming team their second straight setback of the young season as they copped a 61-33 decision Saturday afternoon in Baltimore.

The Bullets captured only three first places out of 11 events. Sheldon Brotman remained undefeated in the diving while Dennis McCurdy won the 200-backstroke and the Bullet relay team, composed of Jack Farrow, Jack Northrup and John Applegate, won top honors in the 400-freestyle relay.

Top man for the Greyhounds was Captain George Krapp who placed first in the 50 and 100-freestyle events.

Gettysburg will go after their first win of the season when they travel to Newark, Del., for a Wednesday afternoon engagement with the University of Delaware.

The results:

400-medley relay — 1. Loyola (Bill Burns, Bob Freimuth, Paul Karpers, Jerry Pries); 2. Gettysburg. 4:31.

220-freestyle — 1. Ted Pilsh, L; 2. Seeley Powley, L; 3. Jack Northrup, G. 2:33.6.

50-freestyle — 1. George Krapp, L; 2. Pete Powley, L; 3. John Applegate, G. 24.7.

200-medley — 1. Freimuth, L; 2. Jack Perrine, G. 2:31.2.

Diving — 1. Sheldon Brotman, G; 2. Vic Corbin, L; 3. Frank Tenme, G. 50.1 points.

200-butterfly — 1. Karpers, L; 2. Bob Sydror, L; 3. Frank Gillinder, G. 2:57.

100-freestyle — 1. Krapp, L; 2. Applegate, G; 3. P. Powley, L. 57.0.

200-backstroke — 1. Dennis McCurdy, G; 2. Don Smith, L; 3. Burns, L. 2:40.4.

440-freestyle — 1. Pilsh, L; 2. Bruce Lahr, G; 3. Preis, L. 5:42.8.

200-breaststroke — 1. Freimuth, L; 2. Doug Seeley, G; 3. Bob Bavis, L. 2:33.2.

400-freestyle relay — 1. Gettysburg (Jack Perrine, Jerry Farrow, Jack Northrup, John Applegate); 2. Loyola.

STORM SIGNALS UP IN COLLEGE BASKETBALL

By DON WEISS
Associated Press Sports Writer

The storm signals are up in college basketball today and by another week the skimpsy list of major unbeatens could be non-existant.

That includes Cincinnati's top-ranking Bearcats as well as the relatively untested Texas A&M, Villanova and LaSalle teams, the trio that joins Oscar Robertson & Co. in making up the current perfect record class.

Cincinnati, which has swept past 12 straight opponents, faces "Challenge Week" within the rough Missouri Valley Conference—meeting St. Louis in Cincinnati Wednesday before moving on to Peoria, Ill., for a Saturday game with Bradley.

Whip Bradley

The Bearcats whipped Bradley 86-71 (Bradley's only loss in 11 games) in December, but had two big factors going for them then. First, the Bearcats were at home. Second, they had hulking 6-4 Bob Wiesenhahn, their best defensive player and a solid rebounder, available to take some of the pressure off Robertson.

Now Wiesenhahn is out with a foot injury and in his two-game absence so far, Robertson has been held to 27 and 24 points—well under his normal 40-point pace—while he attends more to rebounding and defense.

St. Louis, 12th-ranked nationally with a 10-3 record, has the height and muscle to more than match Cincinnati while Bradley, fourth-ranked nationally and unbeaten in 29 home games, has the scoring power to beat Cincinnati unless the Big O can concentrate on shooting.

Key Games Tonight

Texas A&M (10-0), Villanova (9-0) and LaSalle (8-0) also have immediate problems.

The Aggies meet SMU (8-4) Tuesday, a club they edged 58-55 in the Southwest Conference Christmas Tournament final, and then go against Texas (8-3) on Friday. If Villanova survives its game with Temple (9-3) Wednesday, there's the rugged matter at Morgantown, W.Va., Saturday against West Virginia, 12-x, the nation's third - ranked team, and unbeaten on its home floor in 38 consecutive games. LaSalle, which squeezed by Duquesne 68-65 Saturday, has a road test tonight at Morehead State (Ky.).

In some of tonight's key games, Tulane, along with Georgia Tech the surprise Southeastern Conference leader, gets its big test at Kentucky while Georgia Tech (10-1) and sixth-ranked nationally plays twice-beaten Mississippi; ninth-ranked Illinois plays at Purdue and Iowa home to Michigan State in Big 10 features; and West Virginia tries for its 57th straight Southern Conference victory against William & Mary at home.

What's in store for the elite was indicated last Saturday when fifth-ranked Utah and eight - ranked Wake Forest were beaten, and California, West Virginia, Bradley, Ohio State and Southern California--other members of the top 10—had to come from behind to win. Cincinnati ran its two-season win streak to 13 with an 83-50 romp over Tulsa, Illinois downed Minnesota 90-82, and Georgia Tech had an easy time with Mississippi State, 82-60.

Andy Mogish is in his 13th season as coach of the Syracuse freshman basketball team. He's from Binghamton, N. Y.

St. Louis Ace In Semifinal Lead

OMAHA (AP) — Ray Bluth of St. Louis led 96 survivors from the qualifying rounds into the men's semi-finals of the All-Star bowling tournament today.

The pug-nosed star of the national team champion St. Louis Budweisers zoomed to the lead of the 240-man qualifying field Sunday with a towering 24 - game preliminary total of 5272, an average of more than 219 per game.

Bluth helped his cause to no small extent by a rousing 215-267-194-206-267-204—1353 series assembled Sunday.

HOFSTRA PINS BULLETS FOR 26-8 MAT WIN

Mike Pacilio pinned his third straight opponent but the Gettysburg College wrestling team dropped its third match of the season as Hofstra conquered the Bullets 26-8 Saturday afternoon in Hempstead, N. Y.

Pacilio, a junior, is rated as one of the top wrestlers to come out of Gettysburg and so far has proven his ability as he captured the Middle Atlantic heavyweight crown last season and is well on his way to another championship as he dumped Walt Keeley of Hofstra in 2:39 minutes.

John Young, wrestling in the 167-pound class, was the only other Bullet to gain points as he decisioned Dick Jagel 10-4. Gettysburg got off to a poor start when its first three men, Tom Propst, Norm Maisel and Bob Girvan, were all pinned in the second frame.

Coach Jack Ridinger's grapplers will travel to Lancaster Thursday evening for a twin bill with Franklin and Marshall. The Bullet frosh will take part in the first match at 7 p.m.

The results:

123, Don Hannon, H, pinned Tom Propst, 5:27; 130, Mike Bifulco, H, pinned Norm Maisel, 6:58; 137, Frank Baselice, H, pinned Bob Girvan, 7:09; 147, Fred Geopfert, H, decisioned Jim Schmucker, 5:0; 157, Dick Muller, H, pinned Clark Billie, 8:59; 167, John Young, G, decisioned Dick Jagel, 10:4; 177, Dick Hippner, H, decisioned Irv Lindley, 8:0; heavyweight, Mike Pacilio, G, pinned Walt Keeley, 2:39.

Mike Davies New Tennis Champion

TAMPA, Fla. (AP) — Mike Davies of London is new Dixie International tennis champion after a careful back-court campaign against veteran Gardnar Mulloy of Miami.

Davies, 24, usually plays a more forceful game. He said he couldn't go to the net much Sunday against a player as good as the 46-year-old Mulloy, a former Davis cupper.

The Briton was 6-1, 0-6, 6-1, 6-4 in the best-of-five duel, moving into the forecourt only 15 times and using backhand slices and chops with a hard forehand drive. He broke Mulloy's service eight times.

DON SIMMONS WINS SHUTOUT

The use of the face mask by National Hockey League goalies has another big supporter today in Boston's Don Simmons.

Simmons turned back 37 Toronto shots Sunday night as he shutout the second place Maple Leafs 4-0. Before the game, he enlarged the eye, nose and mouth slits but was adamant in declaring that the experiment had better bring success or the mask would go into the waste basket.

It worked and Boston had its second straight victory over the Leafs, whom they defeated Saturday night 3-2.

In other NHL action Sunday night, the Chicago Black Hawks won their first game in nine starts with Montreal as Glenn Hall posted a 3-0 shutout over the league-leaders. The Canadiens edged Chicago 2-1 Saturday.

The last place New York Rangers held off the Detroit Red Wings Sunday night for a 4-3 victory after Billy McNeil's goal in the final 26 seconds brought the Red Wings a 3-3 tie with the Rangers.

ERNIE BANKS DOESN'T CASH IN ON AWARDS

By JOE MOOSHIL
Associated Press Sports Writer

CHICAGO (AP) — When a star athlete begins getting awards as "the most this and the most that" it usually means extra cash in various ventures and appearances.

Such, however, is not the case with Ernie Banks, the slugging Chicago Cub shortstop, who became the first National Leaguer to be named most valuable player twice in succession.

"That's Something"

"If something comes my way, that's fine," said Banks. "But I like working with kids. They need help and when I appear in behalf of the Little Leagues or something like that, naturally, there's no fee."

Banks has a genuine affection for children. He thinks nothing of hanging around the ball park an hour or so after a game signing autographs.

"You can see a gleam in their eyes when they get an autograph," says Banks, "and to me that's something. Some kids get my autograph a hundred times. I know them by sight. But the minute they get it again, they're off running and jumping with joy. Just like it was the greatest thing that ever happened to them. It's just their way of having fun.

Get Some Records

"Kids look up to athletes, I know," continued Banks. "They all have their idols and favorites. Mine was Stan Musial. Although I never saw him play outside of exhibitions in Dallas, I wanted to become just like him. I'm glad I picked Stan because when I got to the majors I really found out what a great guy he is."

Banks, who will be 29 Jan. 31, had a great season last year and is looking forward to a better one in 1960.

The slender wrist hitter slammed 45 home runs and drove in 143 runs. In addition, he set two major league fielding records when he finished with 12 errors and a .985 fielding average.

JOHANSSON IN U. S. TO ACCEPT NEIL AWARD

By JACK HAND
Associated Press Sports Writer

The arrival of Ingemar Johansson, the world heavyweight champ from Sweden, overshadows most of the boxing news on a week in which there is only sporadic firing around the nation.

The usual Friday night fight show on television has been blacked out for a week by a bowling program. Many other boxing centers are finding it difficult to arrange attractive prpograms.

As a result of the skimpy program, Johansson's trip to receive the Edward J. Neil Memorial Award as "Fighter of the Year" from the Boxing Writers Assn. of New York and his conferences in regard to a rematch with Floyd Patterson will dominate the news.

Fight Wednesday

The top fight of the week is scheduled for Wednesday night at Mobile, Ala. between Kenny Lane, Muskegon, Mich., and Ralph Dupas, New Orleans. Dupas won a decision in 1955 and Lane in 1956 in two previous battles.

Ring magazine rates Lane No. 6 and Dupas No. 8 among the welters although the National Boxing Assn. lists Dupas No 10 among the welters and places Lane No. 1 challenger to Carlos Ortiz in the junior welter ranks.

Lane, a southpaw, was stopped on cuts in a junior welter title match with Ortiz last June. He got back to work in October when he beat Virgil Akins. In his latest outing he stopped Ray Lancaster, Dec. 29 at Minneapolis

Dupas a clever boxer, bounched back from a defeat by Rudel Stitch Oct. 7 to stop Pat Lowry Nov. 17 in New Orleans.

The bout will be carried on network (ABC) television at 10 p.m. (EST).

Buffalo, once a real hot fight town, is excited about a meeting of two young unbeaten lightweights Tuesday night: Jackie Donnelly, Buffalo, who has 17 victories and one draw on his record boxes Dickie Diveronica, Carmen Basilio's protege from Syracuse unbeaten in 23 fights.

RACES
Now Thru Feb. 22
CHARLES TOWN
POST TIME 1 P.M. E.S.T.
9 Races Completed by 4:30 p.m.
Heated grandstand adm. 50c. Glass enclosed and heated clubhouse adm. $1. Free parking. Programs only 15c. Races shown indoors on closed-circuit TV Indoor paddock. Food by H. M. Stevens, Inc. Only a short drive via Rts. 15 and 340.

NewspaperARCHIVE.com

16 WEEKEND ACCIDENTAL DEATHS IN PA.

By THE ASSOCIATED PRESS

Sixteen persons were killed in accidents in Pennsylvania over the weekend.

An Associated Press survey has showed 11 traffic fatalities, three deaths in fires, one drowning and one fall.

In the only multiple fatality Peter Walosyanski, 74, and his wife, Catherine, 67, of Phoenixville, were killed in a two-car crash Saturday near Paoli. Eight others were injured.

Pedestrians Die

Other deaths:

West Chester — Judge W. Rodgers, 68, of Thornton, Friday night when struck by a car as he crossed Route 202 near here.

McKeesport—Joseph Messaros 48, of Hannastown, Saturday, in a 30-foot fall from a scaffold on the YMCA building.

Philadelphia—Paul C. Schrieber, 56, Philadelphia, struck by a car Saturday as he crossed the Schuylkill Expressway.

Warren—William B. Perrin, 15, struck by a truck as he rode his pike near his rural Pittsfield home Saturday night.

Drowns In River

Harrisburg — David Siders, 4, Harrisburg, fell into the Susquehanna River Saturday while playing on a bank.

Erie — Caleb Haas, 38, Erie, Saturday night in a two-car accident.

Homestead — John Bulko, 52, Homestead, struck by a car Saturday.

Brookside — Rita Harman, 9, Brookside, in a fire at her home in this Lycoming County community Saturday.

Allentown—Joseph L. Velas, 33, Bethlehem, when his car hit a tree Sunday.

Other Tragedies

Lancaster—Michael J. Heidig, 64, Lancaster, Sunday in a fire apparently started by a cigarette. He had been smoking before falling asleep in his home.

Meadville — Mrs. Addie Mae Hardy, 39, Meaville, in a fire in her home that apparently started with a cigarette she had been smoking before falling asleep.

Greencastle—Mrs. Matilda Hammond, 47, Chambersburg, Sunday, in a car truck collision near Greencastle.

Wellsboro—Ollie E. Rudeen, of North Phillipsburg, killed Sunday when he was thrown from a car and struck his head against a tree.

Ebensburg—David J. Shediock, 4, Sunday, when the auto in which he was riding collided with a tractor-trailer on Route 22 near Ebensburg.

ADVERTISE IN THE TIMES

Emmitsburg

MRS. RALPH LONG
Times Reporter

EMMITSBURG — Danny Gerrie, son of Mrs. Jennie Motter, is a patient at the Kernan Hospital in Baltimore.

A two-week mission by Vincentian Fathers will be conducted at St. Joseph's Catholic Church from January 17-30. The first week will be dedicated to the women of the parish including married, single and high school students. The second week will be dedicated to the men of the parish of the same categories.

The Auxiliary of Francis X. Elder Post 121, American Legion, will hold an evening of games on Saturday, January 23, in the post home.

The Wilson Funeral Service announced this week the addition of its newest employe, Peter G. Wilson. The new employe, a licensed embalmer, is a native of Ohio but has spent the past 15 years in the Gettysburg area, moving here last Saturday to reside in the apartment over the funeral home.

Mr. Wilson, who is 23 years old, is married to the former Gloria M. Harner, of Gettysburg. The couple have two daughters, Cheryl, age 2, and Nancy, six months. Mr. Wilson, no relation to the owner, is licensed to practice embalming in Pennsylvania and is a graduate of the Echols College of Mortuary, Temple University, Philadelphia. He served his apprenticeship at Drexel Hill, Pa., and worked for some time in Harrisburg. Mr. Wilson succeeds John W. Strickhouser who has entered the insurance business locally.

BROCKTON, Mass. (AP) — A woman drove past the scene of a fatal accident Friday night, stopped to ask what had happened and learned the victim was her husband. Nello Picioli, 38, was killed when his panel truck struck a parked car.

DAVIS MAKES PEACE PLANS IN LOUISIANA

By DAVID ZINMAN

NEW ORLEANS (AP)—Balladeering Jimmie Davis, winner of Louisiana's Democratic runoff for governor, today sought to return his political topsy-turvy state to "peace and harmony."

The 58-year-old former governor said he would create a state sovereignty commission to preserve segregation. Negroes have pressed suits in three parishes (counties) to begin school integration.

"I've been all over the nation," said Davis, "and I'm convinced the Southland is the happiest place in the nation. I think right-thinking white people and right-thinking colored people believe that."

To Keep Hands Off

Davis also pledged to keep hands off an independent Legislature and promised he would not build a political machine in this state that remembers the web-like control of Huey P. Long.

A record turnout signaled the end of the Long era. The ticket of lame duck Gov. Earl K. Long, Huey's brother, was soundly whipped in the Dec. 5 primary.

Davis piled up a 71,000 vote lead over New Orleans Mayor deLesseps S. Morrison, seeking to become Louisiana's first Catholic governor since 1834. Davis, a Baptist, got 436,095 votes to Morrison's 414,258 with returns in from all but three of 2,109 precincts. His decisive bulge carried Davis' entire ticket to victory.

In American Tradition

Farmer, businessman and teacher, Davis rose in the American political tradition. He was a sharecropper's son, one of 11 children reared in Jackson Parish in north Louisiana's red hill country.

It was the overwhelming Davis note in the predominately Protestant north and central parish that swept him to victory. Equally important was that Davis ran close behind in Morrison territory — the southern parishes and in New Orleans.

Davis picks up the reins of office May 10 from Gov. Long. He must defeat Republican nominee Francis Grevemberg and States Rights candidate Kent Courtney in the April 19 general election, but his victory is assured in this one-party state.

BIRMINGHAM, England (AP) —Charlie Lee, the butcher who won $702,066 on a soccer pool a week ago, gave away nearly a ton of meat to customers Friday.

When Charlie heard of his good fortune he said: "I'll give all my customers free meat."

Charlie called for a glass of beer and set to work carving up beef, lamb and pork and handing out free roasts for Sunday dinner.

An hour later, having given away about $1,400 worth of meat, Charlie called it a day.

More Equipment Is Available Thru NDE

HARRISBURG (AP) — Pennsylvania school districts may apply for another three million dollars in special teaching equipment under the National Defense Education Act.

Gov. Lawrence said school districts which bought their limit of equipment during the first cycle which ended last year may start all over again.

Applications for the teaching aids should be made by the end of the current school term, Lawrence said Saturday.

He said over $5,500,000 was approved during 1959 under the act for the purchase of equipment.

The teaching aids ranged from a solar battery kit costing $3.65 to a small atomic laboratory costing $650.

TAYLORBACKS LONG RECESS

HARRISBURG (AP) — Republican support for an extended recess of the Legislature grew over the weekend as M. Harvey Taylor, Senate president pro tem, added his backing to the plan.

"By going into recess, we will have the advantage of looking at the revenue collected.

He called for lawmakers to take an extended time-out at least until March 1 after they return Jan. 25 from their present recess.

Taylor said the new sales tax on alcoholic beverages plus the termination of the steel strike should bring "much more revenue than the budget office has anticipated."

He did not, however, say where extra tax yields might be applied.

Albert W. Johnson, House minority leader, last week proposed an extended recess to give lawmakers time to determine whether present taxes will provide enough revenue for increased aid to schools.

TWO ARRESTED ON SWASTIKAS

HARRISBURG (AP)—Two Harrisburg youths accused of painting swastikas on a Jewish Temple and on two automobiles face malicious mischief charges.

David H. Albright and Jack K. Peters, both 19, have admitted defacing Temple Ohev Sholom and two autos parked near the synagogue, Jan. 6, Lt. C. Preston Price of the Harrisburg Police said.

Each is charged with three counts of malicious mischief. If convicted, they face penalties of up to $1,500 in fines and three years in jail, Dist. Atty. Martin Lock said.

Lock quoted Albright as saying he took part in the defacing of the temple because persons of the Jewish faith "think they are better than I am."

The youths were arrested Saturday.

GIVE TO HELP LAUNCH HOPE

Help this ship share our medical knowledge and make friends for America.

Mail your dollar (more if you can) to HOPE, Box 9808, Washington, D.C.

Published as a public service in cooperation with The Advertising Council.

Rep. Andrews To Back Sen. Kennedy

HARRISBURG (AP) — H. G. Andrews, 83-year-old Democratic House speaker, has announced his backing of 42-year-old Sen. John F. Kennedy (D-Mass.) for the presidential nomination.

Although he is the first Democratic leader in Pennsylvania to come out in support of the Massachusetts senator, Andrews looks for strong backing for Kennedy in the Commonwealth.

TO CONFER ON NEW SESSION

HARRISBURG (AP)—Gov. Lawrence has issued a formal invitation to top legislative leaders of both parties to attend a meeting here Jan. 13 to work out a program for the 1960 General Assembly.

He sent invitations to the leaders Friday. They had previously indicated their willingness to attend such a session.

One of the matters certain to be reviewed is the extent of legislation that can be proposed during the session. A newly approved constitutional amendment limits the session to consideration of revenue and appropriation bills.

There has been an informal agreement that constitutional amendments, investigations and Senate confirmation of gubernatorial appointees may also be acted upon.

But one of the problems is whether state aid to schools can be considered an appropriation bill, particularly since a formula is spelled out in making such a grant.

GUIDED TOUR OF HOLLYWOOD SUNDAY ON NBC

By CYNTHIA LOWRY
AP TV-Radio Writer

NEW YORK (AP) — NBC Sunday night turned its Sunday Showcase over to a guided tour of Hollywood, the city where the dream is real—or at least the folks want us to think so.

The hour was a curious ragout compounded in almost equal part of the usual shots of the stars' homes, the back lots of the studios and the big names. Chief of the stew was Hedda Hopper, who seemed to be very sentimental about it all.

One of the more fascinating aspects of the 60 minutes was the plug-dropping. There must have been a score of stars, past and present, on the show, and most of those who are currently employed devoted major portions of their brief moments telling the folks just where they currently may be seen.

Some Interesting Bits

This once-over-Hollywood-lightly opened with Lucille Ball talking about the Desilu workshop and closed with Bob Hope mentioning his forthcoming show while eulogizing his hostess.

But mixed among the plugs were interesting bits. We took a long ride up the pretentious driveway for a glimpse o' the exterior of the 1926-moorish home of Harold Lloyd, with Hedda reminiscing about the days when 12 gardeners manicured its 23 acres.

Marion Davies, whom most of us haven't seen in years, welcomed us to her stucco palace. And Gloria Swanson made an appeal for a return to the kind of movies women like and which allow people "to escape, through romance and love."

Changed Channels

Ricardo Cortez, balding and not at all romantic looking, told how Garbo endeared herself to him while making her first American picture when she almost drowned in a studio tank, but never complained.

Ramon Novarro and Francis X. Bushman talked about techniques of chariot racing with a young actor bent on plugging a new remake of an old movie.

Just before the hour ended, I flipped over to see how Ed Sullivan — who had made such a fuss about the Hollywood show — was holding up. Things looked normal: A girl singer, and then a troupe of Norwegian folk dancers went through their paces. Even Bob Hope, who had a few prepared jokes, wasn't very funny. Mostly, I suspect, because he had no audience and hence no laughter to guide him.

PESSIMISTIC ABOUT CUBA

HAVANA (AP) — Many U.S. businessmen in Havana expressed doubt today that the United States is prepared to be firm enough with Fidel Castro's regime to save their threatened investments in Cuba from seizure.

Deep pessimism continued in American business circles as U.S. Ambassador Philip W. Bonsal returned from Washington, presumably with a new U.S. policy toward the Castro regime.

Bonsal, arriving Sunday night after a month in Washington, declined to say whether he would relay a police statement to Cubans. But he expressed hope for an early meeting with Cuba's acting foreign minister, Marcello Fernandez.

"Time is running out for us fast," commented one American business executive, citing a speed-up in Castro's program of intervention—direct government supervision of operations—and expropriation.

MOVIE QUEEN BRIGITTE IS MOTHER OF BOY

By GEORGE MCARTHUR

PARIS (AP)—France's reigning movie queen, Brigitte Bardot, today gave birth to a boy who weighed more than six pounds.

The blonde film star and her husband, film actor Jacques Charrier, named the child Nicolas.

Miss Bardot and Charrier, both now 25, were married last June 18. Her previous marriage to film director Roger Vadim, who directed her rise to fame as one of the world's most popular sex symbols, was childless.

Charrier was at his wife's side when their son was born about 2:30 a.m. in their Paris apartment.

"Beautiful Boy"

Dr. Louis Bonnet, who delivered the baby, said it was a beautiful boy with brown hair. It "cried lustily," he added.

The film beauty was reported to have undergone the delivery "very courageously." She was in labor about four hours.

Brigitte, a super-curved little blonde, is the daughter of a French industrialist.

Her romance with Charrier started when he appeared as her leading man in the movie "Babette Goes to War." At that time she was supposedly engaged to a crooning guitarist, Sacha Distel.

GOV. LAWRENCE SIGNED 791 BILLS; 23 'NO'S'

HARRISBURG (AP)—Gov. Lawrence signed a record 791 laws during the 1959 Legislature and vetoed 23 bills—fewer than any other Pennsylvania governor in a single session.

He approved the last general law Saturday. It provides that when a legislative session extends beyond Sept. 1, its laws will take effect 60 days after signature if there is no effective date in the bill. The old law provided that they went into effect immediately.

The 791 figure compares with 678 laws signed by former Gov. Leader in the 16½ month 1955-56 session.

Lawrence's 23 vetoes were the fewest since the 1937 session when former Gov. Earle rejected 26 bills. The highest number of vetoes —256—were turned in by former Gov. Pinchot during the 1931 session.

The figures don't include appropriation bills.

PLYMOUTH, England (AP)—A skeleton found chained to the wall of a sewage pit has been identified as that of James Duncan Dunn, a 23-year-old Englishman with a penchant for shackling himself.

Police had thought the skeleton might be that of an American after finding a pair of shoes bearing the trademark of a U.S. company among the pile of bones. But Dunn's parents identified the remains through an inscribed watch. Dunn disappeared in March 1958. A month earlier he had been found chained to the railings of a home in London. Firemen freed him.

Wrap a fresh pineapple before refrigerating to keep flavor in the fruit and out of other foods!

HOWARD JOHNSON'S

SPECIAL
$1.00
FISH FRY
ALL YOU CAN EAT
Fried Fish
French Fried Potatoes
Coleslaw · Tartare Sauce
Freshly Baked Rolls and Butter
EVERY WEDNESDAY
5 P.M. to 9 P.M.

RELIABLE ROOFING SERVICE
ALL TYPES ROOFS
• Sidings • Spouting
• Coating • Painting
CODORI
ROOFERS SUPPLY COMPANY
Phone ED 4-1413

Impala Sport Coupe — one of Chevy's 18 fresh-minted models for '60. See The Dinah Shore Chevy Show in color Sundays, NBC-TV . . . the Pat Boone Chevy Showroom weekly, ABC-TV.

Factories are turning out more new Chevrolets every day. More proud new Chevy owners taking to the road. Now's the time to see your dealer for fast delivery and a favorable deal!

The pickings couldn't be better. All 18 of Chevrolet's sizzling new models for '60 are now rolling off the assembly lines again—in greater numbers than ever before. Your dealer's waiting with all the details, including a long list of pluses that will prove to you the only way to buy a car for less than this low-priced Chevy is to buy a lot less car:

Roomier Body by Fisher—with a 25% smaller transmission tunnel for more foot room.

Pride-pleasing style—combines good looks with good sense.

New Economy Turbo-Fire V8—gets up to 10% more miles on a gallon.

Widest choice of engines and transmissions—no other car gives you a choice of 24 power teams to satisfy the most finicky driving foot.

Hi-Thrift 6—the '60 version of the engine that won its class in the latest Mobilgas Economy Run.

Coil springs at all 4 wheels—for the kind of silent, satiny ride you'd expect only in the most expensive makes.

Quicker stopping Safety-Master brakes—built with Chevy's ever-faithful dependability, they deliver surer stops with less pedal pressure.

CHEVROLET

Now—fast delivery, favorable deals! See your local authorized Chevrolet dealer.

WARREN CHEVROLET SALES
LINCOLNWAY EAST GETTYSBURG, PA.

The Cherriest!

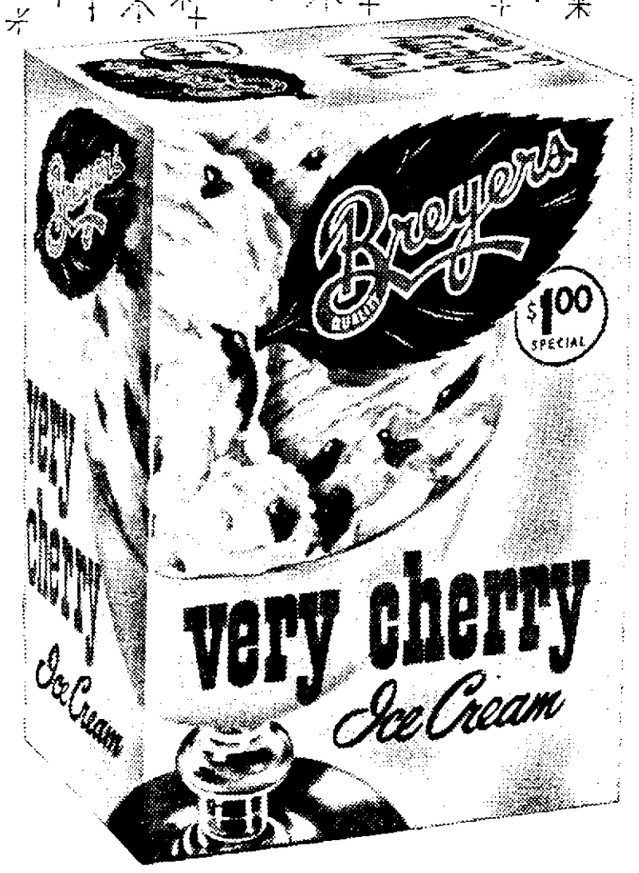

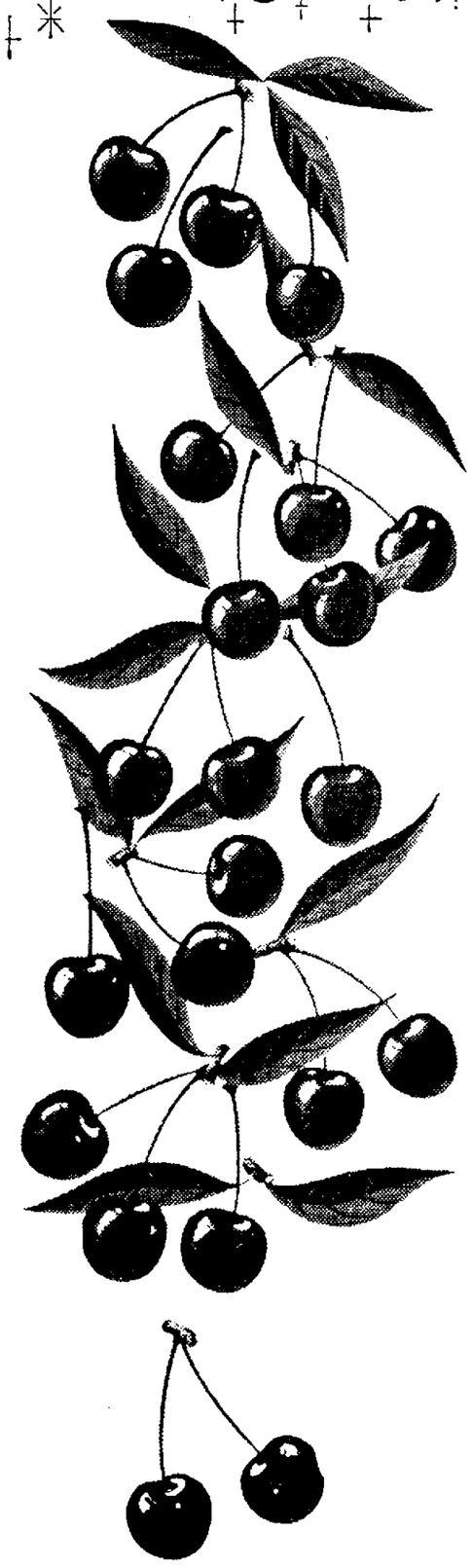

ONLY $1.00 A HALF GALLON*
SAVE 25¢

Plump and juicy cherries . . . lots of them . . . make it the merriest, cherriest, most delectable treat you can imagine. It's wholesome, too! No gelatins or fillers go into its superb recipe. So delicious . . . so very, very popular . . . ice cream lovers demanded Breyers bring it back!

Quality Buyers ask for Breyers

*Other Breyers flavors remain at their regular price, $1.25 a half gallon package.

Aviation Pioneer Becomes Minister, Compares Roles

By DICK MEISTER

RED BLUFF, Calif (AP)—Lester J. Maitland, who 34 years ago made the first transpacific flight to Hawaii, has become a different sort of sky pilot

Once Brig Gen Maitland, he's now the Rev Mr Maitland rector of St Peter's Episcopal Church in this northern Sacramento Valley lumbering and livestock town

"I used to speculate as I flew over the mountains and the great oceans on the insignificance of man's work and the greatness of God," says the much decorated aviation pioneer "I began to see that nothing could be finer than serving Him"

Ever Present Feeling

This feeling was always there says Maitland, a vigorous 60 and lifelong member of the Episcopal Church

"It was a long process" he recalls "I continued feeling that 'This is what I'm going to do' The feeling kept getting stronger and stronger until I finally decided to join the ministry

That was in 1954 He began studying under the Rev George Selway at St Paul's in Lansing Mich, where he was serving as aeronautics commissioner and civil defense director for the state He took the positions after retirement from the Army Air Corps in 1945

Seminary Study

A period of seminary study followed Maitland's initial work in Lansing a term of apprenticeship Then two years ago he came here with his wife to take over at St Peter's

Maitland's main goal now is to enlarge his 350 member congregation and to build a mission in this community of about 6 000 people

Before he donned his clerical garb, Maitland's career spanned nearly the entire history of aviation and brought him many honors including two Distinguished Flying Crosses in World War II

Beginning, Ending Same

It was a career that began as it ended in Army war service In 1917, Maitland left his home in Milwaukee Wis at 18 to start out as a test pilot in the fledgling air service

When he retired he left a bomber squadron that for two years had regularly pitted planes in Nazi held Europe with Maitland flying every mission until they made him quit

How does a general turned minister feel about his war making role?

Bombing Essential

"The bombing was an essential job at the time Maitland explains That's what I was trained for We all have to reconcile ourselves to this sort of thing

Maitland played a significant role in aviation's development, serving as an aide to famed Gen Billy Mitchell and once in 1923 snapping the world's speed record 244 miles an hour

Today that speed may seem outrageously slow like the 25 hours and 49 minutes it took Maitland and aviator Albert Hegenberger to make it from Oakland Calif to Hawaii on that record 1926 flight

ADVERTISE IN THE TIMES

HISTORY ON FILM — Edmund Purdom and Gianna Maria Canale rehearse scene for film being shot in the Italian capital Purdom stars as the monk Rasputin who became all-powerful at Russian court prior to Revolution. Miss Canale plays the Czarina.

Abbottstown

MRS DELLA BUTT
Times Reporter

ABBOTTSTOWN — Renovation progress of the front room of the fire hall was the discussion topic of 17 members of the fire company Tuesday evening at the fire hall The group was told by a contractor that the project would be completed within the month He also explained the reason for the delay Several members of the company volunteered to assist in the $7 000 project during spare time to defray expenses

A youth recreation club meeting will be held at the home of A D Leib The primary purpose of the meeting is the election of officers

Earlier in the Tuesday meeting a letter of condolence was prepared for the family of O S Griffin a charter member of the company who passed away December 15

Tune In WGET, 1450 On Your Dial

Issues Warning On Hasty TV Actions

WASHINGTON (AP) The Federal Communications Commission should avoid being stampeded into taking drastic moves against abuses in the broadcasting industry its chairman says

FCC Chairman John C Doerfer inquiried Friday night could turn out to be worse than the disease

Doerfer spoke to a group of lawyers who practice before the FCC His speech operated to be the first sign of a report last week in which Maj Gen William P Rogers said the FCC had failed to use all its existing powers to root out deception rigging and payola in radio and television

BRUSSELS Belgium (AP) — King Baudouin said Saturday the future Belgian Congo independent state may take the form of a federation of nearly autonomous provinces

The King returned from a three week tour of the Belgian colony to open a round table conference of Congo leaders Belgian government officials said no firm decisions are scheduled to be held in Brussels this month

Concert Pianist Has His Troubles With Rattle, Buzz

MANHASSET, N Y (AP) — If concert pianist Rudolf Firkusny has an artistic headache today he can certainly blame it on what happened Friday night in the high school auditorium here

About 700 persons gathered to hear Firkusny in a program sponsored by the Community Concert Assn

The pianist started playing Beethoven's Variation on a Theme and everybody was enjoying it Then Firkusny fingered an E flat It rattled

The pianist stopped playing gesturing helplessly A member of the concert committee rushed onstage and inspected the piano's innards She triumphantly came up with a match book cover

Firkusny continued this time with a Schubert number All went well until the piano began buzzing when certain keys were struck

Another piano inspection followed On the strings under the metal plate of the instrument was found a metal New York State auto license tab

How the "foreign objects" got in the piano was a mystery to the concert committee

Firkusny Czech born American citizen went on to complete his program and added several encores to make up for the interruption

RIVER DIVER DIES AT WORK

EPHRATA Wash (AP) — A giant of a man and one of the best known and most respected commercial divers on the Columbia River died in its swirling waters Friday at the Priest Rapids Dam site some 50 miles south of here

Just how Clarence Shaw 52 Pasco Wash met his death may be a mystery the river will hold forever Grant County Coroner Ralph Osborn said today

Osborn said the 30 year veteran of diving was pulled from the water on the downstream face of the dam under construction his diving helmet dangling from a strap which held it to a deep sea diving suit he was wearing

He drowned" said Osborn, but just how that helmet came off is a mystery to me as well as a number of professional divers and people in the business who have seen it It wasn't damaged They say there was nothing wrong with it It shouldn't have come off"

Shaw had been working at the 50 foot level of the Grant County Public Utility District dam There was swift turbulent water where he was taking weights from a water outlet channel for one of the dam's generators

ADVERTISE IN THE TIMES

GETTING UP NIGHTS

If worried by Bladder Weakness (Getting Up Nights or Bed Wetting) too frequent burning or itching urination, Secondary Backache and Nervousness or Strong Smelling Cloudy Urine due to common Kidney and Bladder Irritations, try CYSTEX for quick help Safe for young and old Ask druggist for CYSTEX See how fast you improve

PEOPLES DRUG STORE

26 YORK STREET — THE REXALL DRUG STORE — GETTYSBURG PA.

Over 65 Years of Dependable Service

Rexall GIANT JANUARY SALE

GIANT SAVINGS!

SALE STARTS MONDAY, JAN. 11

As Advertised on Rexall's TV SPECIAL with an ALL-STAR CAST Sunday evening, Jan. 10 — NBC-TV And in THIS WEEK MAGAZINE, FAMILY WEEKLY, PARADE and SUNDAY NEWSPAPERS

TISSUES, Rexall Handy Pack Reg 5c ea — 10 for .29
HAND LOTION, Radiance 12 oz, Reg $2 00 — .98
DISH TOWELS, Giant 30 x 38" — 3 for 1.00
COUGH SYRUP, Cherrosote 4 oz, Reg 69c — .39
ENVELOPES, Big Value 100 s — .33

FREE! REXALL BUFFERED ASPIRIN 60's Act twice as fast as ordinary aspirin Won't upset your stomach. when you purchase any of these exclusive Rexall products.

Reg. 69c

THRU Goes thru the skin to kill muscular pain 6 oz 2 98, 2 oz — 1.49
THRU JEL, in a tube 2 oz — 1.49
SUPER ANAPAC COUGH SYRUP 3 oz — 1.49
SUPER ANAPAC TABLETS Fight colds at any stage 30 s 1 79, 12 s — .98
BISMA-REX Antacid POWDER 4¾ oz — .89
BISMA REX MATES Easy to take tablets 75 s — .89

FREE! PURSE-SIZE AEROSOL BRITE SET HAIR SPRAY by Cara Nome — with any purchase of these:

BRITE SET HAIR SPRAY 11-oz. aerosol 1.39 Sets hair right .. keeps it bright
Silque CASTILE SOAP SHAMPOO Pint 1.39 Fast rich lather, rinses easily
Cara Nome BRITE SHAMPOO 12-oz. 1.29 Brightens hair, conditions scalp

Giant 32 oz POLYMULSION, children's multi vitamins Reg $5 95 — 4.95
Giant pk of 72 QUIK-BANDS, assorted adhesive bandages $1 09 Value — .77
Giant 300 tablet bottle MONACET APC TABLETS Proved pain reliever Reg $1 98 — 1.49
Giant 32 oz MILK OF MAGNESIA, Rexall Reg 99c — .79
Giant 24 oz Mi31 Antiseptic MOUTH WASH Reg $1 25 — .99
Giant 24 oz. KLENZO Antiseptic MOUTH WASH Reg $1 09 — .89
Giant 500 tablet bottle ASPIRIN, Rexall 5 gr, Reg $1 98 — 1.39
Giant jar of 24 GLYCERIN SUPPOSITORIES, Rexall Adult's or Infant's Reg 69c — .69

BONUS GIFTS!

FREE! LADIES' HAIR BRUSH with purchase of REX-RAY HAIR DRYER $1.00 Value 5.95 Dryer has hot & cold switch, removable base nylon hair brush FREE

MID-TERM SCHOOL VALUES

BIG VALUE PEN and PENCIL PACK 3 pens 12 pencils, sharpener, eraser. Reg $1 44 88c

Family FILE SET $2 00 Value 1.59 One home secretary and one recipe file

RING BINDER with Perpetual Calendar Reg $1 50 .79
FILLER PAPER. White or pastel colors Reg 50c pks 2 for .79
WRITING PAPER or MATCHING ENVELOPES Reg 25c pks .21
Plus Federal Tax on Some Items

FREE! Rexall ADHESIVE TAPE with purchase of QUIK-PADS 65c Value 49c ½" x 2½ yd tape Quik Pads are 2" square gauze pads

Defender Combination SYRINGE Reg $3 59 Quality red rubber 2.89

Electrex HEAT PAD Reg $5 95 3.98 2 yr guarantee 3 heats

FREE! Rexall De Luxe TOOTH BRUSH with purchase of GIANT 13 oz. Rexall Aerosol TOOTH PASTE $2 18 Value 1.49 More paste better taste less waste

REXALL QUIK-BANDS Adhesive Bandages Choice of 21 "True Skin" transparent 30 Little Warrior" children's colored or 31 Flesh Colored plain or merc Reg 43c 37

GIANT CARA NOME COSMETIC SAVINGS

Queen Size HAND CREAM Reg $1.75 98c Greaseless vanishing type helps keep hands soft
Queen Size DUSTING POWDERS 12 oz Reg $3 00 ea 1.89 Choose Fair Warning Plymouth Garden or Tish Tash
COLOGNES 3 fragrances 5 oz, Reg $2 50 ea 1.50
CREAM DEODORANT Anti perspirant 4 oz, Reg $1 50 .79
SKIN CREAM Massage and night cream Reg $2 50 1.25

RAZOR BLADES, Permedge 60 single edge or 54 double $1 47 Value .88
FILM, Rex Sizes 620 127, 120 Reg 50c ea 3 for .94
PLASTIC GLOVES, Lady Fair S M L Reg 79c .59
VACUUM BOTTLE, Rex by THERMOS Pint, $1 89 Value 1.59
FACIAL TISSUES, Rexall White pink or yellow 400 s Reg 29c ea 2 for .49

VAPORIZER VALUES!

REX-RAY DE LUXE Combination vaporizer, deodorizer, humidifier and bottle warmer.
REX-RAY 1½ GALLON 16-hour, 3 speeds automatic shut-off, night light.
YOUR CHOICE Reg. $9.95 8.88

MANY MORE BARGAINS — COME IN!

Headquarters for

RCA PHILCO ZENITH

Hi Fi Stereo — Portable TV
Record Players — Table TV
Transistor Radios — Console TV
Clock Radios — Color TV

BAKER'S BATTERY SERVICE

Opposite Post Office — Gettysburg, Pa.

DO YOU HAVE ARTHRITIS?

Here is a message you will want to read.

Your doctor can tell you there is absolutely NO KNOWN CURE for arthritis Medical research specialists are now engaged in several projects which it is felt will ultimately help in finding a cure but as yet none has been found Naturally we all live in hope they will be successful but until that time we must be content to get the best relief possible Right now there is a fast safe and effective relieving agent available called Pruvo Pruvo's ingredients have been used in hospitals and clinics prescribed by doctors and have helped scores of men and women to lead happy and full lives You can be sure nothing is faster safer or has been proven more effective than Pruvo for a temporary easing of a minor arthritis condition or its related diseases rheumatism neuritis sciatica lumbago and bursitis And it's wonderful for backache and every day muscular aches and pains too Try Pruvo today Ask your druggist for a generous 75 tablet TRIAL SIZE BOTTLE You must be satisfied with the results of your purchase price will be refunded by the maker There are larger economy sizes also, for continued use

PEOPLES DRUG STORE

6½% ANNUALLY 6½%

Integrity Income Fund offers you a fixed income of 6½%. Interest paid or compounded quarterly. Deposit any amount from $100 to $10,000. $10.000 earns a check every 3 months of $162.50. There's no charge for deposits or withdrawals.

JACK R. PAYNE & CO.

6½% Phone ED 4-1512 238 Baltimore St, Gettysburg 6½%
George W Taughinbaugh, Rep.

Science Shrinks Piles New Way Without Surgery Stops Itch—Relieves Pain

New York, N Y (Special) — For the first time science has found a new healing substance with the astonishing ability to shrink hemorrhoids, stop itching, and relieve pain — without surgery

In case after case, while gently relieving pain actual reduction (shrinkage) took place

Most amazing of all—results were so thorough that sufferers made astonishing statements like "Piles have ceased to be a problem!"

The secret is a new healing substance (Bio-Dyne*)—discovery of a world famous research institute.

This substance is now available in suppository or ointment form under the name Preparation H* At your druggist Money back guarantee.

*Reg U. S. Pat. Off.

SINUS Sufferers

Here's good news for you! Exclusive new "hard core" SYNA-CLEAR Decongestant tablets act instantly and continuously to drain and clear all nasal-sinus cavities One "hard core" tablet gives up to 8 hours relief from pain and pressure of congestion. Allows you to breathe easily—stops watery eyes and runny nose. You can buy SYNA-CLEAR at your favorite drug counter, without need for a prescription Satisfaction guaranteed by maker. Try it today! PEOPLES DRUG STORE

BASEHORE INSURANCE AGENCY

29 Lincoln Square — Gettysburg, Pa.

ED 4-4412

Do you want complete protection for your home with one policy, one convenient payment time and one expiration date to watch? You need

HOME OWNER'S POLICY PROTECTION

See Us Soon for Information About This Most Modern and Convenient Insurance Package

Night and Day Emergency Phones ED 4-5820 and PO 6-5506 (Mechanicsburg)

Use This Guide To Find The Numbers You Need

JOIN THE FUN + + + EVERYBODY PLAYS

"FIND YOUR NAME"

10 — FREE PASSES TO MAJESTIC THEATRE — 10

Two Free Passes to the Majestic Theater will be given away to five different people each week. It's easy to play—Nothing to buy—Read all the advertisements on this page and there will be five names printed in five different advertisements, selected from the new telephone directory, and each name will receive Two Free Passes good for any day in the week.

If your name appears, all you need to do is clip the advertisement from the page and mail or bring to the Gettysburg Times business offices. Your passes will be ready for you.

AGRICULTURAL

Adams Co. Farm Bureau Co-op Assn.
N. Washington Street
EDgewood 4-1108
Feeds — Petroleum Products — Paints

APPLIANCES ELECTRICAL

HOTPOINT
ELECTRIC RANGES
REFRIGERATORS
WASHERS
DRYERS
DISHWASHERS
Phone 175 Biglerville, Pa.
Klinefelter's Electric Service
Industrial — Home Wiring

APPLIANCE STORES

Weishaar Bros. Inc.
EDgewood 4-1159
Appliances
Sheetmetal - Heating and Plumbing
37 Baltimore Street

APPAREL—For Women

Tobey's
Fashion Center for Women
Nationally Advertised Apparel
Mrs. Esther Snanebrook
EDgewood 4-5118
30 Baltimore Street

AUTO DEALERS

Warren Chevrolet Sales
Sales - Chevrolet - Service
"More people drive Chevrolets than any other car!"
EDgewood 4-3191
Nights and Sundays
EDgewood 4-1030
Lincolnway East

AUTO DEALERS

Phiel's Garage
438 York Street
General Service
EDgewood 4-2713

Adams Co. Motors Corp.
Sales - FORD - Service
EDgewood 4-1101
165 York Street

Hunt Ave., Inc.
RAMBLER
Sales and Service
Top Quality Used Cars
EDgewood 4-2189
Gettysburg R. 1

AUTOMOBILE DEALERS USED CARS

Heller & Keller Motors
EDgewood 4-4511
ESSO PRODUCTS
Reliable Used Cars
243 Steinwehr Avenue

Zentz Auto Sales
Carlisle Street
EDgewood 4-6116
If You're Trying to Find a Really Good Used Car—SEE US!

BANKS

The Gettysburg National Bank
EDgewood 4-2151
Complete Banking Service Since 1814
Member F.D.I.C.
Loans - Mortgages - Trust Service
Drive-in Service
10 York Street

BEAUTY SHOPS

Alice's Beauty Salon
Alice G. Caufman, Prop.
Specializing in permanents, manicuring and hair coloring.
Open: Tues., Thurs., Fri. 8 A.M. to 8 P.M., Sat. 8 A.M. to Noon—Closed Monday
EDgewood 4-1283
Located at Seven Stars Pony Farm On Route 30 West

Ginny's Beauty Shop
Mary V. Woodward, Prop.
EDgewood 4-1914
Specializing in Styling, Manicuring, Permanents
Hours: Tues. Through Fri., 8 Till 8 Sat., 8 Till 4, Closed Mon.
145 West Street
Diagonally Across From New A&P Store

Hotel Gettysburg Beauty Salon
Margaret Spangler
Owner-Operator
EDgewood 4-4017
A Complete Service "For Women Who Care"
Hotel Gettysburg Annex

BEER DISTRIBUTORS

Gettysburg Beverage Co., Inc.
EDgewood 4-3316
All Popular Brands of Beer and Soda
Delivery Service
Lincolnway East

Superior Distributing Co.
EDgewood 4-1157
Ira E. Kumon Jr.
40 Brands of BEER
Delivered Ice Cold to Your Home
603 S. Washington Street

BUILDING MATERIALS

Wolf Supply Co.
EDgewood 4-2117
Building Materials
Hardware - Insulation
Paint - Millwork
27 North Stratton Street

DRUG STORES

Rea & Derick, Inc.
The Stores of Service
EDgewood 4-1911
Lincoln Square and York Street

ELECTRICAL CONTRACTOR

Hull's Electric Service
EDgewood 4-1118
Commercial - Residential Industrial Installations and Maintenance
R. 3, Gettysburg, Pa.

ELECTRIC SERVICE

Refrigeration
Air Conditioning
Repair Service
EDgewood 4-4815
Frank Keller
Plank's Electric Service
644 York Street

EXCAVATING CONTRACTOR

Bernard Lochbaum
Excavating Contractor
McKnightstown, Pa.
EDgewood 4-3588
All Types of Excavating - Grading
Free Estimaes

FREIGHT—Unclaimed

Cullison's
"We Sell For Less"
EDgewood 4-1811
- Gas and Electrical Appliances
- Linoleum and Floor Coverings
- Gas Water Heaters
- Building Materials

Closed All Day Wednesday
Rear of 331 S. Wash. St.

FUEL OIL

C. E. Williams & Sons
35 Hanover Street
EDgewood 4-5511
Coal and Fuel Oil Dist.
Excavating Specialists
Free Estimates

FURNITURE STORES

R. W. Wentz & Sons
EDgewood 4-3411
A Complete Line of Furniture and Floor Coverings
121 Baltimore Street

N. O. Sixeas
EDgewood 4-5216
Complete Home Furnishings
General Electric and Westinghouse Appliances
62 Chambersburg Street

GAS—Bottled

Supergas
- Home Heating
- Incineration
- Gas Appliances

For Natural Gas and LP Gas
Town and Country Gas Service, Inc.
EDgewood 4-1516
Gettysburg, Pa.

GROCERY STORES

Gallagher's Food Market
EDgewood 4-2410
Complete Line of Groceries - Frozen Foods and Fresh Meats
West Middle Street

Jacobs Bros. Cash Grocery
EDgewood 4-1168
Fresh Meats - Staples
Green Groceries - Fruits
Frosted Foods - Candies
FREE DELIVERY
Lincoln Square

Strausbaugh's Fruit Bowl
Full Line Fruits Vegetables and Groceries
EDgewood 4-5512
R. 5, Gettysburg, Pa.

GLASS

Gettysburg Glass Company
Leroy Binkele, Owner
EDgewood 4-5015
Specializing in Curved Winshield Installations
Auto and Window Glass
Glass Tops for Furniture
109 Chambersburg Street

HOTEL

Hotel Gettysburg
EDgewood 4-3181
On Lincoln Square

HOUSEHOLD MERCHANDISE

FULLER BRUSH DEALER
Charles E. Brady
157 North Washington St.
EDgewood 4-1529

INSURANCE

Fissel-Britcher Agency
Fire - Marine - Casualty and Surety
Walter E. Trostle
EDgewood 4-3414
Lincoln Square

JEWELRY STORES

Blocher's Jewelry Store
EDgewood 4-1621
Jewelry
Watches - Diamonds
Gift Shop
25 Chambersburg Street

Coffman Jewelers
EDgewood 4-1510
Ross Crouse
Omega Watches
Art-carved Diamonds
16 Baltimore Street

NEWSPAPER

The Gettysburg Times
EDgewood 4-1131
Adams County's Only Daily Newspaper

OPTICIANS

Martin Optical Company
EDgewood 4-3514
35 Chambersburg Street

PLUMBING AND SUPPLIES

L. U. Collins & Son
Plumbing and Heating
EDgewood 4-1267
MYERS
Pumps & Water Systems
R. 1, Gettysburg, Pa.

RADIO AND TV SERVICE

Keystone Television & Hi-Fi Sales & Service
For Same Day Service On All Makes and Models
EDgewood 4-3513
Television - Hi-Fi - Radio Antenna Installation and Repair Service
241 North Stratton Street

RESTAURANTS

Marine's Rec-Park Diner
George and Christine Marine, Props.
247 West St., Gettysburg
EDgewood 4-9020
Try Our 75c LUNCH
Served Daily

RUG AND CARPET CLEANERS

Hess Duraclean Service
(opposite Acme Market)
Rugs - Furniture Cleaning
EDgewood 4-5949
FREE ESTIMATES

SERVICE STATIONS

Saylor's Gulf Service
Washing - Lubrication
Oil Change
EDgewood 4-4517
Citywide Pickup and Delivery
Complete Road Service
One Block North of Lincoln Square
103 Carlisle Street

SERVICE STATION

Atlantic Truck Stop
Specializing in Truck Service
EDgewood 4-1022
24-hour Road and Wrecker Service
U. S. Route 15 South, R. 2

Battlefield Service Station
For a Complete Servicing of Your Car
EDgewood 4-6113
Gulf Products - Firestone and Dunlop Tires - Pickup and Delivery Service
Baltimore Street

Thomas Shell Service Station
Service With Shell
EDgewood 4-5317
446 Steinwehr Avenue

Arnold's Shell Service
EDgewood 4-1812
Complete Facilities to Give You the Best Service
Washing - Lubricating
Oil Change
250 Buford Avenue

TIRES

Dale's Tire Shop
Your Dunlop Tire Dealer
EDgewood 4-5617
Tire Recapping Service
Wheel Aligning and Balancing
Complete Lawn Mower Service
SUE'S DINER, NEXT DOOR
R. 4, ½ Mile N. on Rt. 15

STANLEY WARNER MAJESTIC GETTYSBURG · ED 4-2513

WED.-SAT.

"The Miracle"

Carrol Baker
Roger Moore
Walter Slezak

•

Technirama
Technicolor

NOTE TO ADVERTISERS—

If you wish to be represented in this new regular feature of The Gettysbug Times each Monday, phone The Gettysburg Times, Advertising Department, ED 4-1131.

Do Your After Christmas Swapping Through Classified Ads

ANNOUNCEMENTS

● Card of Thanks 2

STULL: We wish to thank all the relatives, friends and neighbors for their acts of kindness; also for the floral tributes and expressions of sympathy following the death of our wife and mother.
THE ALLEN STULL FAMILY

BEAM: We wish to thank the neighbors and friends for their kindness and sympathy shown during the illness and sudden death of our husband and father, Guy L. Beam; also for beautiful floral tributes and cards of sympathy.
MRS. MILLIE R. BEAM AND FAMILY

NOTICES

● Personal 7

I NEED 3 MEN
For representatives of Electrolux Corp. in Gettysburg. No previous experience needed. Must be reliable and have an automobile. Come in my office for an interview Mon., Wed. and Fri. mornings between 9 and 12 noon.
ELECTROLUX CORP.
43 E. Walnut St. Hanover, Pa.
Roy Ingram, Branch Mgr.

● Special Notices 9

DIRECT-TO-YOU GAS, High St., now open. Save 2c per gallon. Free gift.

THE GETTYSBURG National Bank's 1960 Christmas Fund is now open.

INCOME TAX, individual and farm forms completed. Al and Maggie Bagley, Biglerville 311-J.

PUBLIC CARD party, Tues., Jan. 12, at 8 p.m. at post home. VFW Auxiliary.

GARRARD CHANGERS, world's finest record playing equipment in stock. Dave's Photo Supply, Gettysburg, Pa.

"500" AND pinochle card party, Fairfield High School, Wed., Jan. 13, 8 p.m. Benefit Fairfield Lions Club.

STROMBERG CARLSON, stereo components and consoles in a full range to suit your purpose. See them now. Dave's Photo Supply.

CARD PARTY, benefit of Warner Hospital, county library. Prize for every table, door prizes, sponsored by Woman's Club of Gettysburg.

EMPLOYMENT

● Male Help Wanted 14

MAN WANTED for fruit farm, house provided. Richard Trostle, Biglerville. Phone 202-R-4.

WANTED: MEN for year-round work in orchard and farm. Reference last place worked. Write Box 5, c/o The Gettysburg Times.

WANTED: EXPERIENCED year-round man to work on fruit farm. Newly renovated house with all modern conveniences available. Thomas O. Oyler, Gettysburg R. 3. Phone Biglerville 220-R-11.

EXPERIENCED HOSPITAL attendant for full-time position. Apply to Mrs. Mowery, Warner Hospital, weekdays.

● Male and Female Help 15

MAN OR woman: Start the new year off right, serve consumers in E. Adams Co. with Rawleigh Products. Many earn $3.50 per hour from start. Part time considered. Write Rawleigh's, Dept. 623-1108, Chester, Pa.

WANT TO make $20 or more in a day for full-time route work? Man or woman. Write Furst-McNess Co., P. O. Box 371, Baltimore, Md.

● Female Help 16

WAITRESS WANTED for night work, 4 to 12 p.m. Apply Tick Tock Lunch, or phone ED 4-4677.

EMPLOYMENT

● Female Help 16

WANTED: PART-TIME waitress, day work, experience preferred but not necessary. Apply in person. George and Christine Marine, Rec-Park Diner, opposite A&P Store, Gettysburg.

MAKE GOOD money spare time. Introduce successful money-raising plan to church groups, clubs, other organizations. Members raise money with big line nationally-advertised products they order from you. Generous commissions year 'round, big repeat orders. Dignified and easy. Send for free details without obligation. Write Anna Elizabeth Wade, 1438 Tyree St., Lynchburg, Va.

WOMEN: $5.00 an hour spare time. Sensational new apparel party plan. We deliver, collect. Free sample line. Beeline Fashions, Bensenville 6, Illinois.

● Situation Wanted 17

WILL KEEP children during day. Mrs. William Baker, 215 W. Middle St.

WILL KEEP children in my home, ages 3 to 5. Phone ED 4-3747.

WANTED: CHILDREN to keep in my home, $5 weekly. Apply 8 Newark St., Littlestown, in evenings.

FOR SALE

● Miscellaneous 18

STORE AND restaurant equipment, stoves, refrigeration, shelving, drill press, grinder, 11-ft. deep freeze, dairy case. Hollinger's Market, Littlestown, Pa.

FRESH SAUSAGE, 49c lb.; ponhaus, 3-lb. can, 25c; spareribs, 29c lb.; fresh hams for curing, 45c lb. Welty's Mkt., Emmitsburg.

FRESH EGGS, guaranteed, delivered weekly in and around Gettysburg. Phone orders to Allen A. Weikert, ED 4-2867.

FARM FREEZERS, antifreeze, petroleum products. Adams County Farm Bureau, ED 4-1108.

EVER SEE
Lower's Egg Basket?
35c A Dozen
Bring Your Own Container
LOWER'S STORE, Table Rock

FUEL OIL, kerosene, gasolene, Cities Service products, top in quality and service. Call anytime. J. C. Hartman & Sons, 246 Balt. St. Phone ED 4-1915.

TIRE SALE, Kelly-Springfield, durable, long lasting quality, written lifetime guarantee. J. C. Hartman & Son, 246 Balt. St. Phone ED 4-1915.

2 FOLDING garage doors with track, also 1-wheel trailer. Mac Sites, Fairfield R. 1.

8" HEAVY duty Black & Decker saw, ½" B&D drill, 5-string banjo, small oil burner. Russell Kint, R. 5.

COAL DEALERS and truckers. Lowest Wilmot breaker introductory offer. No. 1 buckwheat anthracite, $7.50 per ton. Lowest ash. Anthracite Fine Coals, Inc. Donaldson, Pa. (near Tremont).

GAS AND wood or coal combination stove and heatrola. Call ED 4-2990.

● Household Goods 19

AIRWAY SWEEPER with polishing and scrubbing attachments. Call John Bradley Stevens, 524 Carlisle St.

FOR BETTER used furniture, see Swifty Palmer, Amoco Station, Buford Ave., side Glenn L. Bream's Garage.

1958 ROPER apartment-size gas stove, excellent condition. $75. Call Gary Bechtel, Fairfield 61-W-2.

FOR SALE

● Farm and Garden 24

STAYMAN WINESAP, Jonathan, Red Delicious, Golden Delicious and cider apples, from 7:30 a.m to 8:30 p.m. Va. Mills Fruit Farm, A. W. Geigley, Prop., Fairfield, Pa. Phone Fairfield 174-J.

FOR SALE: Hogs for butchering, 15c lb. Allen A. Weikert. Phone Gettysburg, ED 4-2867.

DRESSED BEEF by quarter. Front quarter 39c lb., hind quarter 49c lb. Welty's Market, Emmitsburg, Md.

LIKE COUNTRY ham? Try one of our genuine hickory smoked hams, only 69c lb. Bigham's Meat Market, Breckenridge St.

BARREL
Molasses
Lower's

● Livestock 27

5 NICE pigs, 9 weeks old. Roy Heintzelman, R. 1, 2 mi. out Taneytown Rd.

● Nursery Stock 28

GROW YOUR own fruit. Plant fruit and nuts trees for shade and ornamental effect, also enjoy fresh fruit and nuts from home grounds. Write for free copy new 56-pg. planting guide catalog in color—offered by Virginia's largest growers of fruit trees, nut trees, berry plants, grape vines and ornamental plant material. Salespeople wanted. Dept. P-13, Waynesboro Nurseries, Waynesboro, Va.

● Poultry and Chicks 30

600 MT. Hope Queen Leghorns, vaccinated, 7 months old, laying 80%. Harold Gayman, Greencastle, Pa., R. 3. Phone 423-R-2.

STEWING CHICKENS, 10c LB.
Allen A. Weikert
Phone ED 4-2867

● Wanted to Buy 32

WANTED: LEGHORN fowl, highest cash prices. G. W. Brown, New Oxford, MAdison 4-6516.

WANTED
Oak, white pine and hemlock saw timber
THE GOOD LUMBER CO.
Quincy, Pa.
Phone Waynesboro PI 9-5154

RENTALS

● Apartments for Rent 35

4-ROOM AND bath apartment, 2nd floor. Available February 1. Apply 322 Baltimore St.

3-ROOM & bath apartment, heat and h.w. furnished. Avail. at once. Mares Sherman, ED 4-3219, 4-5913.

3-ROOM AND bath apartment; 4-room furnished apartment. Frank Beard, 106 Carlisle St.

FIRST FLOOR, 3-room apartment, suitable for 1 or 2 adults, second block from Square. Phone ED 4-3037.

FOR RENT: Furnished, two rooms for light housekeeping. Apply 137 S. Washington St.

● Houses for Rent 36

8-ROOM HOUSE AND BATH
Near Orrtanna
Phone Fairfield 106-J

7-ROOM HOUSE in country, 3 mi. south of York Springs. Call Carlisle CH 9-3629.

HOUSE IN the country, conveniences, vacant. Phone ED 4-2769 or MA 4-7882.

5-ROOM AND bath house, oil heat, club cellar, sun porch, garage. Apply 12 E. Main St., Emmitsburg, Md., or phone HI 7-5594.

● Miscellaneous Rentals 39

NEW AND used mobile homes for sale or rent. Apply E. L. Smith Garage.

RENTALS

● Miscellaneous Rentals 39

6 ROOMS and bath available, for apartment or office space, on the Square. Apply The Shetter House.

REAL ESTATE

● Houses for Sale 41

For Real Estate
See WEST'S
J. C. Bream, Rep. ED 4-1824

WM. A. BIGHAM
Fairfield Rd. ED 4-3817
Real Estate and Insurance

NEW 7-ROOM brick house, gas-fired hot water heat with carport and back porch closed in with jalousie windows. Located 1 mile north of Gettysburg off Rt. 34. Phone 4-4849.

IF IT'S REAL ESTATE
See Lee M. Hartman
56 Hanover St. Phone ED 4-1713

FOR SALE OR RENT
Brick, 4 bedrooms, 1½ baths, $90 per month
LEE M. HARTMAN
56 Hanover St. Phone ED 4-1713

3-BEDROOM HOUSE, all conveniences, 5 mi. out of town. Jacob Shaull, R. 4, Gettysburg.

● Farms for Sale 43

10-ACRE FARM, $8,500. East of Gettysburg along paved road, set in grass. Modern 6-room house, garage, poultry house, hog pen, level land. E. F. Brunsman, 10 Ward Ave., Westminster, Md. Phone Tilden 8-4111.

AUTOMOTIVE

● Trucks for Sale 49

1955 DODGE panel truck, excellent condition. Phone ED 4-4277.

● Automobiles for Sale 50

USED CARS, STATE INSPECTED AND WINTERIZED
FOR SALE
'59 Buick LaSabre 2-dr. Riviera, R&H
'57 Buick Century 2-dr. Riviera, fully equipped
'55 Buick Super 4-dr., R&H, dynaflow
'54 Buick Super 4-dr., R&H, dynaflow
'53 Buick Roadmaster 4-dr., fully equipped
'53 Buick Super 4-dr., R&H, dynaflow
'53 Buick Special 2-dr. Sdn., R&H, straight shift
'52 Buick Super 2-dr. Riviera, R&H, dynaflow
'59 Ford V-8 Fairlane 500 2-dr., R&H, Fordomatic
'57 Pontiac 4-dr., R&H, hydramatic
'57 Plymouth V-8 4-dr., H., push-button drive
'56 Ford Ranch Wagon, H, 6-cyl.
'55 DeSoto Firedome 4-dr. Sdn., R&H
'54 Pontiac 4-dr., R&H, hydramatic
'54 Dodge Coronet 4-dr., R&H, gyromatic dr.
Open Evenings Until 9
GMAC Financing
WINTRODE'S GARAGE
N. Queen St. Littlestown, Pa.
Phone 170-J

SEE E. L. Smith for good used cars and trucks 241 S. Washington St. Phone ED 4-1819.

VOLKSWAGENS
Only authorized factory dealers for York and York County
EUROPEAN MOTORS
Rossville and Camp Hill, Pa.

A fleet admiral in the U.S. Navy wears five stripes on his sleeve — one is two inches in width and the other four a half inch wide.

The kantar, a weight used in the Middle East and Africa, is worth 99.05 pounds in Egypt, 112 pounds in Morocco and 124.45 pounds in Turkey.

AUTOMOTIVE

● Automobiles for Sale 50

GOOD, DEPENDABLE
CLEAN USED CARS
'59 Plymouth 2-dr. Hardtop Sports Fury, Golden Commando V-8 engine, Torqueflite trans., power steering and power brakes, swivel seats, radio and heater, sportdeck $2,895
'58 Chrysler Saratoga 4-dr. Sdn., R&H, power steering, one owner, $2,295
'58 Plymouth Club Sdn., auto trans., R&H, excellent cond., must be seen to appreciate, $1,795
'57 Plymouth Savoy V-8, 4-dr. Sdn., Powerflite, green, 1 owner, $1,295
'57 Chrysler Saratoga 4-dr. H.T., just reduced, $2,095
'57 Chevrolet Bel Air 4-dr., S. Auto., R&H, brown and white, $1,645
'57 Plymouth Savoy V-8, 2-dr. Sdn., R&H, $1,045
'56 Chevrolet Bel Air 4-dr. S. Air cond., P.S., brown and white, $1,495
'56 Chevrolet 4-dr. HT, auto., red and white, $1,395
'56 Plymouth Savoy 2-dr. S., auto., $1,145
'55 Ford V-8 4-dr. Sdn., Fordomatic, blue, $1,095
'55 Rambler 4-dr., S.W., automatic, green, $1,095
'55 Pontiac 4-dr. Sdn., automatic trans., R&H, two-tone green, new paint, $945
'54 Buick 2-dr. Htop. R&H, rebuilt engine, auto. trans., power steering, good dependable car, $895
'54 Dodge Station Wagon, 6-cylinder, very economical car to run, $595
'54 Crown Imperial, full power, R&H, low mileage, locally owned, $995
'53 Dodge Coronet V-8, Club Cpe., automatic trans., $495
TRUCKS
'53 Brockway Tractor, $1,595
'58 Int. ½-ton Pickup, $1,395
'48 International ¾-ton Pickup, $295
Int. A100, ½-ton Pickup, new, $1,650.
Int. Metro Mite, new, $1,950
GETTYSBURG MOTORS, INC.
Factory Authorized Dealers
for Plymouth, Chrysler-Imperial Cars and International Trucks
York and Sixth Streets
Gettysburg, Pa.

SERVICES OFFERED

● Miscellaneous 51

CLEANING, CARPET and furniture, rug binding and seaming. Hess Duraclean, phone Gettysburg ED 4-5949.

ON THE job mobile steam cleaning—industrial, farm and orchard equipment. Call Hanover MElrose 2-5213.

WILL REPAIR old or build new furniture, especially children's. Call ED 4-5858.

FLOOR AND wall Vikon metal tile; inlaid linoleum; free estimates given. Hoak Tile Co., phone ED 4-5634 after 6 p.m.

● Piano Tuning 69

PIANO TUNING and rebuilding. Everhart Sons, 225 Frederick St., Hanover. Write or phone MElrose 2-3177.

● Septic Tanks Cleaned 72

SEPTIC TANKS and cess pools cleaned. Sanitary Equipment. Max H. West, Fayetteville. Phone FLanders 2-2811.

SEPTIC SERVICE: Septic tanks cleaned and installed. Excavating and grading. E. G. Shealer & Son. Call ED 4-4811 or 4-3565, Gbg. R. 4.

● Upholstering 76

REUPHOLSTERING, ALL the latest fabrics, for free estimates see G. L. Adair, R. 1. Phone Gettysburg ED 4-2260.

BUSINESS OPPORTUNITIES

● Business Opportunities 84

TO SOME alert promoter of exhibits. A rare opportunity is waiting for you. I am the collector, exhibitor and owner of the world's most unusual exhibit in wood. The state is making a limited access highway on Route 22. We will be isolated from traffic on R. 22. I honestly believe it would go over big in Gettysburg if properly located. I will rent, lease or go partners with some reliable person. Writing letters won't accomplish much. Call in person. See this beautiful exhibit and you will be convinced that we really have something worthwhile. Call at John's Hobby Museum, 40 miles east of Harrisburg on Rt. 22. It's a better plan to call during the week. Please let us know if and when you may call.

LEGAL NOTICE

Estate of Charles J. Sheldon, late of Fairfield, Adams County, Pennsylvania, deceased.

Notice is hereby given that Letters Testamentary upon the estate of the above decedent have been granted unto the undersigned by the Register of Wills of Adams County, Pennsylvania; all persons having claims or demands against the estate of the said decedent are requested to make known the same and all persons indebted to the said decedent are requested and required to make payment without delay unto the undersigned.

ROY O. SEASE
Hopewell Rd., R. 2
Hagerstown, Maryland, and
GEORGE L. HARBAUGH
Fairfield, Pa.
Executors, Estate of Charles J. Sheldon, deceased.

Or to their attorney
Daniel E. Teeter
Gettysburg, Pennsylvania

Willie Shoemaker, 1959 riding champion, has led the nation's jockeys in most winners five times.

The University of North Dakota's tallest basketball player is 6-foot-6 Paul Havig, a sophomore from East Grand Forks, Minn.

NEW FASHIONS STREAMLINED, WEIGHTLESS

By DOROTHY ROE
Associated Press Women's Editor

NEW YORK (AP) — American fashions for the new decade are as streamlined as a jet plane and as weightless as a satellite in space.

This is the long-range outlook presented today to more than 200 visiting fashion editors as New York designers unveiled spring fashions for 1960 at the 34th national Press Week showings.

The new clothes transcend boundaries of geography and seasons, and demonstrate a new philosophy of fashion which has been developing for several years. It is a plan which has grown out of the broadened activities of modern women, who require a basic year-round wardrobe adaptable to any occasion or locale.

Lightweight Trend

The trend is on lightweight, travel-happy clothes than can be condensed into capsule luggage, emerging wrinkle-free and ready for come what may. Comfort and functionalism are important requirements of the new fashions, which must allow ease of movement and be easy to care for. New man-made fibers play an important part in the over-all plan, appearing in many fabric blends in combination with cotton, silk, wool and linen.

Silhouette news of the new season is concentrated chiefly above the belt, with a variety of new sleeve treatments achieving width at the top. There are capelet sleeves, puffed sleeves, kimono, raglan and dolman sleeves, all designed for a wide-shouldered look without resort to bulky padding. Even coats and suits are likely to have short sleeves, ranging from bracelet length to above the elbow.

Spring Fabrics

Fabrics this spring make headline news, both for their beauty and variety and for their new and scientific talents. Textile manufacturers have achieved new triumphs in fabrics which are feather-light, wrinkle-resistant, colorfast, easy to clean and comfortable to wear. Some of the new chiffon-weight woolens, silks and blends appear in precisely tailored styles, others in softly draped treatments.

Evening dresses go in for daringly low necklines this spring, whether they are long and slinky or short and full-skirted. The dinner and theater suit is still a favorite outfit, as is the dress-and-jacket costume which can take a woman through a business day and a festive evening with no more trouble than removing a jacket after 5.

Today's Pattern

4962
SIZES 10–20

by Anne Adams

Look bright and beautiful for breakfast and after in this snappy-wrap princess. No fitting problems — wrap 'n' tie waist. Choose gay, drip-dry cotton — checks, print, plain. Tomorrow's pattern: Women's style.

Printed Pattern 4962: Misses' Sizes 10, 12, 14, 16, 18, 20. Size 16 takes 4¼ yards 39-inch.

Printed directions on each pattern part. Easier, accurate.

Send 35 cents in coin (no stamps, please) for Pattern, with Name, Address, Style Number and Size. Address:
PATTERN BUREAU
The Gettysburg Times
Box 42, Old Chelsea Station
New York 11, N. Y.

Store pure vanilla in a dark place. True flavor extracts are highly volatile; keep them tightly closed.

Barr Returns His Senator's Salary

PITTSBURGH (AP) — Mayor Joseph Barr of Pittsburgh says he will no longer accept his salary or expense money for serving as a state senator.

Barr, a Democratic state senator since 1940, said Saturday he already returned his salary and expense check for January to Harrisburg. It amounted to $456.40.

Barr said he plans to spend most of his time at the mayoralty job in Pittsburgh — remaining in the Senate only until his successor is elected next November.

As a senator, Barr receives $3,000 a year in salary and $3,000 more annually in expense money. He receives $20,000 a year as mayor.

MIYOSHI UMEKI HAS RETURNED TO HOLLYWOOD

By BOB THOMAS
AP Movie-TV Writer

HOLLYWOOD (AP)—Oscar winner Miyoshi Umeki is back in Hollywood after a year and a half of chanting "The Flower Drum Song."

The petite Japanese has a wry way of looking at things.

"Before, I had always played night clubs and never stayed more than a month in one place," she said. "Then I found myself playing in a show month after month, doing the same thing every night. It was very strange.

Like Going To School

"It was like going to school again. Except that instead of learning something different, I had the same lesson every night. I learned the same thing over and over.

"I felt as though I wanted to change things. But if I tried to do something different, I would get lost and wouldn't know where I was.

"I couldn't change, because the conductor would always be there at the end of a speech, waiting to start the music.

Never Missed Show

"On opening night in Boston, I forgot my lines. I felt so sorry for the other actor, because I thought he was the one that had forgotten. He just stood there and said 'You, you.' Finally I realized that I had forgotten. So I spoke in Japanese."

Miyoshi of the soft voice and frail frame seems little suited to the rigors of eight performances weekly in a Broadway musical. Yet she missed not a performance during her long run. Only Keye Luke of the rest of the cast had a perfect record as well.

Despite her minor complaints, Miyoshi enjoyed the experience and shed tears when she left the cast. She feels the run was good for her career, which is getting active with her new availability. She is doing a Dinah Shore show this Sunday, has a TV series prepared for her and may appear with Marlon Brando in "The Ugly American."

GOVERNOR'S OLD MANSION WILL BE SOLD

HARRISBURG (AP)—In a move Gov. Lawrence says is dictated by "economy and obsolescence," the executive mansion on Front St. will be placed on the auction block Feb. 4.

The governor described the intended sale of the 27-room mansion as a "sad, sentimental loss." Lawrence announced the sale Saturday.

The 27-room mansion has housed 23 governors for almost a century.

"Drafty Hodgepodge"

Andrew M. Bradley, property and supplies secretary, however, labeled the building a "drafty hodgepodge . . . a warren of stairways and corridors." Architects, he said, dismiss any possibility of modernization as futile.

He said usable furnishings and other equipment have been removed from the mansion to the governor's summer residence at Indiantown Gap—now designated by Lawrence as the new executive mansion.

The summer residence, enhanced by spacious lawns and a swimming pool, is a half hour's commuting distance from Harrisburg.

The governor and the families of all the state's chief executives have eschewed the downtown mansion for the Indiantown Gap residence since during World War II.

STEELE'S
First IN DRY CLEANING
APPROVED SANITONE SERVICE
Phone Enterprise 1-3747

SUFFOCATES AFTER PEPPER PUT ON TONGUE

LEVITTOWN, Pa. (AP)—When Marcel Smallwood was six months old the Home Missionary Child Care Society of Philadelphia placed him in the home of a Levittown couple.

His foster parents, Mr. and Mrs. Paul Forsberg, grew to love the boy over the 15 months he was with them. They planned to adopt him and his sister, Denise, 4, who came into the Forsberg home later.

But tragedy stalked the joyful day.

Had Temper Tantrum

Marcel had a temper tantrum Saturday night at the dinner table. He ran into a bedroom crying. Mrs. Forsberg, 28, followed the boy into the bedroom and placed some pepper on his tongue as a punishment.

Suddenly the boy began reacting strangely. Mrs. Forsberg knew something was wrong—but what. She tried to give him water but to no avail. She telephoned a doctor who advised her to call an ambulance.

While awaiting the ambulance, Mrs. Forsberg administered artificial respiration.

Dead On Arrival

The ambulance arrived in the meantime and rushed the boy to the hospital. He was dead on arrival.

Coroner Dr. Wilmer Trinkle said an autopsy showed the boy died of "asphyxiation due to inhalation of pepper." He said a date would be set for an inquest.

The tragedy was disclosed Sunday by Lt. Julius Mezaros of the Falls Township Police Department. No charges were filed.

The Forsbergs have one other child of their own, Paul Jr., 2, but as Forsberg put it: losing Marcel "was like losing a child of our own."

Hugh Wise scouts for the New York Yankees and his son, Kendall Wise, is a second baseman on the Detroit Tiger roster.

Charter No. 9256 Reserve District No. 3
Report of Condition of the
FIRST NATIONAL BANK
of Fairfield
in the State of Pennsylvania, at the close of business on December 31, 1960.
Published in response to call made by Comptroller of the Currency, under Section 5211, U.S. Revised Statutes.

ASSETS	
Cash, balances with other banks, including reserve balance, and cash items in process of collection	$ 187,861.09
United States Government obligations, direct and guaranteed	413,905.79
Obligations of States and political subdivisions	21,014.88
Other bonds, notes and debentures	42,000.00
Corporate stocks (including $4,350 stock of Federal Reserve bank)	4,350.00
Loans and discounts	945,440.81
Bank premises owned $9,200.00, furniture and fixtures $10,900.00	20,100.00
Real estate owned other than bank premises	3,000.00
Total Assets	$1,637,722.57
LIABILITIES	
Demand deposits of individuals, partnerships, and corporations	$ 517,644.01
Time deposits of individuals, partnerships, and corporations	905,716.48
Deposits of United States Government (including postal savings)	6,761.42
Deposits of States and political subdivisions	44,349.24
Total Deposits $1,473,471.15	
Other liabilities	6,331.64
Total Liabilities	$1,479,802.79
CAPITAL ACCOUNTS	
Capital Stock: Common stock, total par $50,000.00	$ 50,000.00
Surplus	95,000.00
Undivided profits	12,919.78
Total Capital Accounts	$ 157,919.78
Total Liabilities and Capital Accounts	$1,637,722.57
MEMORANDA	
Assets pledged or assigned to secure liabilities and for other purposes	$ 54,000.00
Loans as shown above are after deduction of reserves of	9,653.47

I, Kenneth R. Slonaker, Cashier of the above-named bank, do solemnly swear that the above statement is true to the best of my knowledge and belief.
KENNETH R. SLONAKER
Cashier

Correct—Attest:
C. L. SHEADS
E. H. NEWMAN
J. B. WADDLE
Directors

State of Pennsylvania,
County of Adams, ss:
Sworn to and subscribed before me this 8th day of January, 1960, and I hereby certify that I am not an officer or director of this bank.
NINA G. STORRICK
(SEAL) Notary Public
My commission expires March 8, 1961

JOHNS MANVILLE BLOWN
HOME INSULATION
Warmer in Winter
Cooler in Summer
A. E. TAYLOR, Rep.
Phone MA 4-7088
R. 1, New Oxford, Pa.

Martin
Optical Company
Lenses Duplicated
Frames Repaired and Replaced
Prescriptions Filled
35 Chambersburg Street
Gettysburg, Pa. Ph. ED 4-3114

BLONDIE

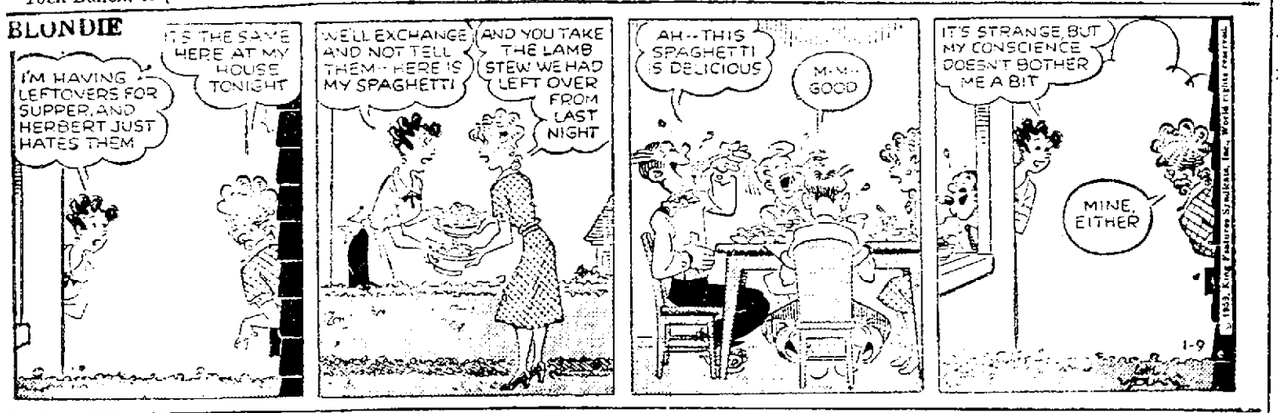

DONALD DUCK

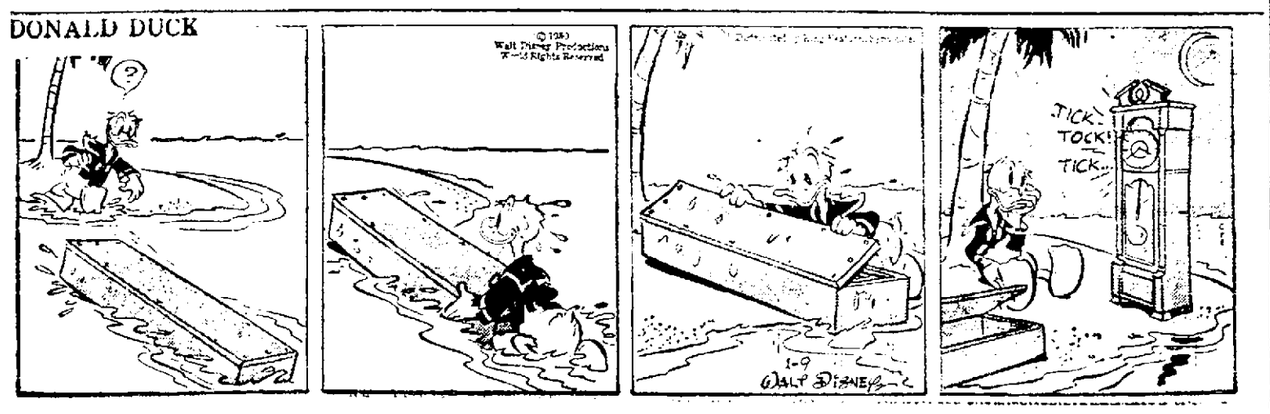

NewspaperARCHIVE.com

Wirephotographs, First Transmitted 25 Years Ago New Year's Day, Have Revamped Pictorial Journalism Field

Editor's Note: A quarter of a century ago, the flick of a switch heralded an historic milestone in world journalism — transmission of pictures directly to newspapers. Here is the story of Associated Press Wirephoto, a development that changed the face of your newspaper.

By TED BOYLE

New York's bedlam of horns had been silenced. Chicago was hyperventilating. San Francisco was poised for the final formalities minutes of the year 1935.

It was almost 3 a.m. in New York. But the anxious group of men gathered in the ugly, old-looking machines had no thought of the New Year's holiday. Christmas, New Year's Day, just passed, was a normal work day in the midst of the latest, most precise, mass of wires, tubes, motors and the odd-looking machines. The men were alerted to occasional sounds of traffic that sifted through windows against the Near Year's eve.

Would they succeed where others had failed?

Newspapers by wire was a fantasy to many in those days, although editors had dreamed for years of pictures streaming across their desks at the same time as wire stories they illustrated. As recently as 18 months before, one firm that dropped the effort after spending $2,000,000 and years of time.

Across the country, in 47 newspaper offices in 25 cities other anxious men, too intent to yawn despite the hour, were grouped around similar strange apparatus. They, too, speculated on the chances for success.

Last Wires Checked

The last of the tangle of brightly colored wires was checked. Meters were studied. The last test picture, a shot of Brooklyn Bridge, had gone well. New York was ready — this was official. Over a network of telephones linking the 25 cities New York announced it was about to begin.

An engineer glanced around the small room, took a deep breath, and flipped a switch. Technicians, crowded forward as a cylinder on emitting a high-pitched electronic whistle. Cylinders on the machines in Chicago, San Francisco, Atlanta, Kansas City, Boston, Syracuse, Philadelphia and other cities started to spin simultaneously.

Minutes ticked off. The men stood in whispers and shuffled uneasily as the cylinders whirled and electric impulses surged through 10,000 miles of wire. The picture was a large one, 11 x 17, requiring 17 minutes for completion. Finally the machines stopped.

In the 25 receiving cities attendants rushed the negatives into emerged, triumphantly carrying photographic prints that only an expert could tell the difference between them and the original still wrapped around the cylinder in New York.

Historic Milestone

It was spot news, too. Only hours before, survivors of an air crash had been photographed high in the Adirondacks of New York State. The picture, rushed to New York, showed them and their rescuers near the scene of the crash. Many readers saw the picture later that day in their newspapers and wondered: "What will they do next?

The first successful network for newspicture transmission was under way. But one picture can't establish a network. Would it continue to work?

San Francisco took the wire, cylinders whirled again, and out of the magic apparatus came a scene of Chinese residents celebrating the Occidental New Year. Chicago followed with a picture of a Loop celebration. New York sent the month-old scene at Times Square. The latter prints, 10 x 8 in size, each required only eight minutes for transmission. An inch per minute is still standard in photo transmission.

Associated Press Wirephoto, which completely revolutionized pictorial journalism, made its debut early last 25 years ago New Year's Day.

In a congratulatory radio address that day, the late Frank B. Noyes, president of The Associated Press, called it "perhaps the most important development in journalism since the first news dispatch was sent by telegraph in 1846."

Greeted Enthusiastically

The first pictures sent in the dramatic opening transmission are carefully preserved in Associated Press files. Almost 50 news events were illustrated that day, with pictures arriving almost simultaneously with the story. Editors were enthusiastic.

The group of men who participated in that historic event are well-scattered now. Some, of course, are dead.

Kent Cooper, then general manager of The Associated Press and the man responsible for Wirephoto's tremendous success, is retired. Harold Carlson, the engineer who started the first picture racing across the continent, is now chief engineer for AP. Norris Huse, who headed the photo department and helped organize the network, is dead.

Even the spot where the first Wirephoto machine was located is lost. The Associated Press moved to Rockefeller Center from the office building at 383 Madison Avenue in 1938. The latter structure since has been extensively renovated and probably a stenographer occupies the spot, unaware that newspaper history was made there.

Day Recalled

Arnold Fehse, now Wirephoto operations supervisor in New York was then supervising traffic engineer for AP at the Omaha (Neb.) World-Herald. Fehse recalls:

"I can remember everyone in the office crowded around the amazing, new machines, waiting for that first transmission. Some were a little disappointed when the first picture was not a shot of the crowd at Times Square — it being New Year's. But then someone in the crowd reasoned that with AP top news came first — and the rescue of those flyers was a big story."

Looking back 25 years, Carlson said:

"When everyone had reported the first Wirephoto picture was received perfectly, we all felt greatly relieved. Norris Huse was the first to break the silence. 'Harold,' he said, 'I guess you knew it would work—but I would not have bet a nickel on it.'

"Not only did it work, it continues to work, and through research is being made to work better all the time."

That night a quarter-century ago climaxed more than 90 years of experiments and dreaming by many generations.

Morse's Work

Samuel F. B. Morse had effectively harnessed the strange electrical impulses to send messages over wires by 1838, when he demonstrated his telegraph system to President Van Buren and his cabinet. It wasn't long before man's genius led him to wondering if these impulses couldn't be made to send images and pictures. First experiments were made in the early 1840's. Over the years machines were constructed in many laboratories, but they were either impractical or fell far short of producing good pictures.

As early as 1847 a scientist transmitted sketches by wire. They were drawn on tinfoil with ink made with insulating shellac. An electrified needle was used to scan the sketch. The electric circuit was broken as the needle passed over the shellac lines and this formed the image on chemically prepared paper on the receiving drum. Metal needles or styli were used for scanning in early experiments until replaced by the photo-electric cell, which is the heart of today's Wirephoto.

Probably the system that came closest to success—before Wirephoto—was inaugurated by American Telephone and Telegraph Co. in the early 1920's. A. T. and T. set up and operated eight sending and receiving centers in the nation and transmitted pictures for photo outfits. By today's standards the pictures were of poor quality, the system required almost two hours to prepare a photo for transmission, and in many cases the limited number of sending and receiving points still imposed great delays on picture delivery. In 1933 the system folded.

Slow Transmission

Most pictures moved by fast train mail, 85 hours to cross the continent, or by airplane 24 hours, and the comparatively frail craft of those days suffered many weather delays. Photographs many times reached editors' desks long after the news event they illustrated had been forgotten.

Cooper of AP fumed at the picture delay.

When scientists at A. T. and T.'s Bell Telephone Laboratories announced they had perfected a machine with a new approach to the principle of sending pictures, Cooper watched a demonstration and then began a long fight to convince his news cooperative that AP should enter the business of transmitting its own pictures. With the skill and daring of a field general Cooper succeeded in winning the backing of enough publishers and editors in the cooperative to engage in this radical venture.

By comparison with the quality of today's news pictures the early transmissions were not sharp. As Carlson points out:

"A man could get away with wearing a mussed-up suit in early pictures-by-wire. But even before the war, Wirephoto had been improved to the extent that every wrinkle in a suit would show up."

That first transmission was only the beginning for AP's engineering laboratory. It soon designed a suitcase-sized portable Wirephoto transmitter. This sends pictures over ordinary telephone wires into the national network from the most remote scenes of fires, floods, earthquakes.

Small Papers Benefited

A small receiver was designed and Wirephoto became available to small papers. Early Wirephoto equipment weighed tons and required space equal to a good sized office. Today it is only as big as a desk.

Two outstanding developments in the first 25 years of Wirephoto were AP Photofax and the use of radiophoto to send pictures over vast ocean areas.

Photofax, introduced seven years ago, receives pictures on a continuous roll of paper. It requires no attention and the pictures need no processing. They are ready for the engraver.

The majority of the more than 500 AP Wirephoto network subscribers now receive their pictures on AP Photofax machines.

AP began regular transmissions by radiophoto in 1951 to South America. This has expanded to daily transmissions to Europe and the Far East. The system is still growing. Today it is possible to send a photo from Europe to Japan in just eight minutes.

Recalls Anecdote

Carlson said new equipment had eliminated much of the static and interference marring early radiophoto experiments. He likes to tell the story of the editor in South America.

"Reception was perfect, for the first picture," recalls Carlson, who was in the country setting up the service. "But when it appeared in the local newspaper I noticed it was streaked. After rechecking everything, I spoke to the editor. He informed me he had ordered an artist to paint in some defects, because 'nobody would believe it was a radiophoto without them.'"

One of the arguments against establishment of Wirephoto a quarter-century ago was that there were not enough good newspictures to justify it. Today pictures are racing across the country on Wirephoto's national network. In addition 26 AP state Wirephoto networks feature local and regional picture coverage.

Where do all the pictures come from? Who needs them?

Well, a writer wouldn't be expected to agree completely with the Chinese proverb that one picture is worth 10,000 words. But he'll concede that 25 years of Wirephoto have demonstrated there's something to the saying at that.

Dial 1450 For W-G-E-T Programs

THIS EVENING

6:05—Take Five
6:10—Tonight and Tomorrow
6:15—Between The Lines
6:30—Early Evening Melodies
7:00—World News
7:05—State News
7:10—Weather
7:15—American Chemical Society Show
7:30—Waltz Time
8:00—World News
8:05—Interlude
8:15—Meet the Artist
8:30—Album Time
9:00—World News
9:05—Music of the Masters
10:00—World News
10:05—Drifting and Dreaming
11:00—News & Sports Roundup
11:15—Sleepytime Serenade
11:54—Inspiration Time

TUESDAY'S PROGRAMS

6:00—World News
6:05—Reveille Roundup
7:00—News
7:05—Morning Show from Hbg State Airport
7:25—Weather—The Weatherman
7:30—World News
7:35—Morning Show
8:00—World News — Martin Optical Co.
8:05—Local News — First National Bank of Gettysburg —Reported from The Times newsroom by G. Henry Roth
8:15—Morning Show
8:25—Weather
8:30—Morning Show
8:55—World News
9:00—Christian Science
9:15—Sacred Heart
9:30—Music Coast To Coast
10:00—World News
10:05—State News
10:10—Weather
10:15—Sammy Kaye Show
10:30—Top Tunes Of Our Times
10:55—News
11:00—Guess Who—Guess What
11:30—Farm Journal, Part I
11:45—Farm Journal, Part II
12:00—World News—R. W. Wentz & Sons
12:05—State News
12:10—Today & Tomorrow
12:15—Farm Show — Part 4
12:30—Sons Of The Pioneers
12:45—Westward To Music
1:00—Siesta Time
1:30—Passport To Day Dreams
2:00—Freddie Martin Show
2:15—Lawrence Welk Show
2:30—Afternoon Concert Hall
3:00—World, State & Local News
3:15—Three Sons
3:30—Song and The Star
4:00—World News
4:05—Music As You Like It
4:55—World News
6:00—Potpourri
5:45—Sports
6:00—World News
6:05—Tonight & Tomorrow
6:10—Take Five
6:15—Between The Lines
6:30—Early Evening Melodies
7:00—World News
7:05—State News
7:10—Weather
7:15—Here's To Veterans
7:30—Waltz Time
8:00—World News
8:05—Interlude
8:15—Organaires
8:30—Album Time
9:00—World News
9:05—Music Of The Masters
10:00—World News
10:05—Drifting & Dreaming
11:00—News
11:55—Inspiration Time
12:00—Sign Off

Coal Research Bill Is Readied

By JOHN KOENIG JR.
Associated Press Special Service

WASHINGTON (AP) — Revised coal research legislation tailored to meet requirements of the administration is now being prepared, Rep. John P. Saylor (R-Pa) reported today.

Saylor was one of numerous backers of a proposed independent coal research commission who were chagrined when President Eisenhower last September vetoed a bill setting up such a commission.

"This time we'll write the bill the way the administration wants it and we'll see what happens," Saylor told a newman.

He said the new bill, which he hopes to present to the Interior Committee for immediate action on Jan. 17 will establish an enlarged coal research program to be handled by the U. S. Bureau of Mines.

CHANGE OF NAME

HARRISBURG (AP)—The word "teachers" has been dropped from the title of the state's 14 teachers colleges.

"This is a mere formal change of name and in no way alters or amends the functions or roles of these institutions," Gov. Lawrence said Friday when he signed the enabling legislation.

WIESBADEN, Germany (AP) — The U.S. Army has officially declared missing the 10 men aboard an otter aircraft which vanished on a North African flight Monday. Wreckage washed up on the Libyan shore indicated the plane, flying from Wheelus Air Base, Libya, to Bengasi, crashed in the Mediterranean about 75 miles south of Bengasi.

AUCKLAND, New Zealand (AP) —The Americans have agreed to provide landing facilities for Soviet planes at the South Pole, "Deep Freeze" headquarters in Christ Church reported Saturday.

U.S. Rear Adm. David Tyree said the Soviets asked for permission to refuel at the pole in flights to complete seismic measurements made by a Soviet ground party which visited the pole Dec. 26-30.

Television Programs

Video Everyday—All Rights Reserved—H. T. Dickinson & Co., Inc.
2-WMAR 4-WRC 5-WTTG 7-WMAL 8-WGAL 9-WTOP 11-WBAL 13-WJZ

MONDAY HIGHLIGHTS

8:00—(2-8-9) THE TEXAN — Stars Rory Calhoun. Bill Longley is appointed a special deputy to bring law and order to a corrupt border territory and track down the unknown bandit chief who controls the area.

8:30—(7-13) BOURBON STREET BEAT—Richard Long and Andrew Duggan co-star in "Inside Man." Rex Randolph sets out to smash a notorious gang headed by a mother and son after his detective brother-in-law is slain.

9:30—(4-8-11) TV THEATER—A top singing star (George Maharis) is amazed when he fails to impress a young woman in "Action Off Screen."

OTHER PROGRAMS

Hotpoint Electric Appliances
Hoover Cleaners
Dish Washers
Kitchen Maid
Sunbeam Appliances
GE Appliances
KLINEFELTER'S ELECTRIC SERVICE
Industrial — Home Wiring
Phone 175 Biglerville, Pa.

MONDAY EVENING
5:00—(2) Parade
(4) Bozo The Clown
(5) Mill Grant Show
(8) Adv. in Sherwood Forest
(9) Early Show
(11) Movie
5:25—(13) Superman
6:30—(2) Life of Riley
(4) Susie
(7-13) My Friend Flicka
(8) Crusader Rabbit
5:45—(8) Boots & Saddles
5:55—(2) Sunny Says
6:00—(2) Our Miss Brooks
(4) Burns and Allen
(5) Popeye
(7) Little Rascals
(13) Early Show
6:15—(8) News, Weather, Sports
6:20—(11) News & Sports
6:25—(5) Weather
(9) Almanac
6:30—(2) Badge 714
(4-11) Sam & Friends
(5) The Three Stooges
(7) Life of Riley
(9) 6:30 Spotlight
6:35—(4) Weather & Sports
(11) Camera 11
6:40—(8) Regional News
6:45 (4-8-11) News
(9) Douglas Edwards News
6:55—(2) Sports, News, Weather
7:00—(2) Seven O'Clock Final
(4) Death Valley Days
(5) Quick Draw McGraw
(7) 7 O'Clock Final
(8) The Millionaire
(9) San Francisco Beat
(11) Wichita Town
7:15—(2) Douglas Edwards, News
7:20—(13) 7:20 Dateline
7:26—(9) TV Editorial
7:30—(2) Masquerade Party
(4) Richard Diamond
(5) Waterfront
(7-13) Cheyenne
(8) Ozzie and Harriet
(9) This Man Dawson
(11) Feature
8:00—(2-8-9) The Texan
(4-11) Love and Marriage
(5) Major League Baseball Presents
8:30—(2-8-9) Father Knows Best
(4-11) Tales of Wells Fargo
(7-13) Bourbon Street Beat
9:00—(2-9) Danny Thomas Show
(4-11) Peter Gunn
(5) Douglas Fairbanks Presents
(7) Feature
9:30—(2-9) Ann Sothern Show
(4-8-11) TV Theater
(5) Medic
(7-13) Adventures in Paradise
10:00—(2-9) Heaney
(4-8-11) Steve Allen Show
(5) Man Behind The Badge
10:30—(2-9) June Allyson Show
(5) Byline
(7) Man With A Camera
(13) News and Weather
10:45—(13) Late Show Comedy
11:00—(2-8) News, Weather & Sports
(4-11) News, Sports & Weather
(5) Starlight Theater
(7) 11 p.m. Final
(9) 11 P.M. Report
(13) Late Show Feature
11:15—(9) Late Show
11:20—(2) Channel 2 Theater
(11) Bob Jones Day Book
11:30—(4-8-11) Jack Paar Show
(7) Walter Winchell File
12:00—(7) Code 3
12:45—(13) Topper
12:50—(2) News & Bible Reading
1:00—(4) Inspiration
(8) News—Wanted Persons
(9) Meditations & Weather
(11) News and Swing Shift Theater
(13) News & Norman Vincent Peale

TUESDAY MORNING
5:50—(4) Test Pattern
5:55—(4) News
(11) Morning Meditation
6:00—(4-8-11) Continental Classroom
(9) Morning Meditations
(13) Previews
6:25—(9) Morning Meditations
6:30—(2) Classroom Two
(4-8) Continental Classroom
(9) Classroom 9
(13) Beginning Russian
7:00—(2) Early Riser
(4-8-11) Today
(9) News
(13) Jack Wells Closeup
7:05—(9) Ranger Hal
7:25—(2) World News
(4) Today in Washington
(8) News Highlights
(11) Today in Maryland
7:30—(2) Early Riser
(8-11) Today
7:35—(9) Morning Show
7:48—(7) News
7:50—(7) Thoughts of God
8:00—(2-9) Early News
(7) Pete & His Pals
8:10—(2) Baltimore Area News
(9) Area News
8:15—(2-9) Captain Kangaroo
8:25—(4) News
(11) Today in Maryland
8:30—(7) Pete and His Pals
(8-11) Today
9:00—(2) Amos and Andy
(4) Inga's Angle
(5) Kartoon Klub
(7) Ding Dong School
(8) College of the Air
(9) Morning Show
(11) What's New With The Lewmans
(13) Three Stooges
9:15—(13) Let's Speak French
9:25—(2) Morning News
9:30—(4) Mr. Adams and Eve
(5) Jack La Lanne Show
(7) Amos 'N' Andy
(8) Talking Town
(13) Three Stooges
9:40—(2) Dialing for Dollars
9:45—(11) Alphabet Shorthand
10:00—(2) Susie
(4-11) Dough-Re-Mi
(5) 10 O'Clock Movie
(7) Trouble With Father
(8) Life of Riley
(13) Romper Room
10:25—(9) News
10:30—(2-8) Op The Go
(4-8-11) Play Your Hunch
(7) My Little Margie
11:00—(2-9) I Love Lucy
(4-8-11) The Price Is Right
(7) Topper
(13) Whom Do You Trust?
11:30—(2-8-9) December Bride
(4-11) Concentration
(5) Time For Science
(7) People's Choice
(13) Medic

AFTERNOON
12:00—(2-9) Love of Life
(4-11) Truth or Consequences
(5) Romper Room
(7-13) Restless Gun
(8) News & Weather
12:15—(8) TV Farmer
12:30—(2-9) Search For Tomorrow
(4-8-11) It Could Be You
(7) Love That Bob
(13) Big Afternoon Movie
12:45—(2-9) Guiding Light
1:00—(2) Woman's Angle
(4) Cameo Theater
(5) Movie
(7) About Faces
(8) Film Playhouse
(9) Theater of Stars
(11) One O'Clock Show
1:30—(2-9) As The World Turns
(7) I Married Joan
2:00—(2-9) For Better or Worse
(4-11) Queen For A Day
(7-13) Day in Court
2:30—(2-9) House Party
(4-11) Thin Man
(5) Way of Life
(7-13) Gale Storm Show
2:45—(8) Calendar of Events
2:50—(8) Joan Klein Show
3:00—(2-9) The Millionaire
(4-8-11) Young Dr. Malone
(5) Mr. D. A.
(7-13) Beat the Clock

1 HOUR DRY CLEANING
Open 7 A.M. to 6 P.M.
Saturday Till 8 P.M.
Prosperity Cleaners
Carlisle at Railroad St.

3:30—(2-9) The Verdict Is Yours
(4-8-11) From These Roots
(5) Dateline Europe
(7) Whom Do You Trust?
(13) Buddy Deane Show
4:00—(2-9) Brighter Day
(4-8-11) House on High St.
(5) Pick Temple's Ranch
(7) American Bandstand
4:15—(2-9) Secret Storm
4:30—(2-9) The Edge of Night
(4-8-11) Split Personality
4:55—(13) Popeye

EVENING
5:00—(2) Weight Control Thru Diet
(4) Bozo The Clown
(5) Mill Grant Show
(7) Bandstand
(8) Quick Draw McGraw
(9) Early Show
(11) Five O'Clock Movie
5:15—(2) The Living Word
5:25—(13) Quick Draw McGraw
5:30—(2) Life of Riley
(4) Susie
(7-13) Rin Tin Tin
(8) Crusader Rabbit
5:45—(8) 26 Men
6:00—(2) Our Miss Brooks
(4) Burns and Allen
(5) Popeye
(7) Littles Rascals
(13) Early Show
6:15—(8) News, Weather & Sports
6:20—(11) News And Sports
6:25—(5) Weather
(9) Almanac
6:30—(2) San Francisco Beat
(4-11) Sam & Friends
(5) Three Stooges
(7) Life of Riley
(9) 6:30 Spotlight
6:35—(4) Weather & Sports
(11) Camera 11
6:40—(8) News
6:45—(4-8-11) News
(9) Douglas Edwards, News
6:55—(2) Sports Picture
7:00—(2) Seven O'Clock Final
(4) The Honeymooners
(5) Sheriff of Cochise
(7) 7 O'Clock Final
(8) Peter Gunn
(9) Cannonball
(11) Rescue 8
7:10—(2) Weather
(7) News
7:15—(2) Douglas Edwards, News
7:20—(13) 7:20 Dateline
7:26—(9) Editorial
7:30—(2) It's In The Name
(4-11) Laramie
(5) Wrestling
(7-13) Bronco
(8) Phil Silvers Show
(9) Markham
8:00—(2-9) Dennis O'Keefe Show
(8) This Is Your Life
8:30—(2-9) Many Loves of Dobie Gillis
(4-8-11) Fibber McGee & Molly
(7-13) Wyatt Earp
9:00—(2) Tightrope
(4-11) TV Dance Party
(7-13) Rifleman
9:30—(2-8-9) Red Skelton Show
(4-11) Startime
(5) Highway Patrol
(7-13) Philip Marlowe
10:00—(2-8-9) Garry Moore Show
(4-11) David Niven Show
(5) Mr. District Attorney
(7) One Step Beyond
(13) TV Presents
10:30—(4) Mike Hammer
(2-11) Strikes & Spares
(7) Keep Talking
(13) News & Weather
10:45—(13) Late Show Comedy
11:00—(2-8) News, Sports & Weather
(4-11) News, Weather & Sports
(5) Starlight Theater
(7) News
(9) 11 p.m. Report
(13) Late Show Feature
11:15—(9) Late Show
11:20—(2) Channel 2 Theater
(11) Bob Jones Day Book
11:30—(4-8-11) Jack Paar Show
(7) Meet McGraw
12:00—(7) City Dectective
12:45—(13) Topper
1:00—(4) Inspiration
(8) News
(11) News, Swing Shift Theater
1:05—(2) News & Bible Reading
1:15—(13) News & Norman Vincent Peale

Carrier
HEATING - COOLING
J. R. WEAVER CO.
Gettysburg, Pa. ED 4-5011

GAMES for Young and Old
GILBERT'S HOBBY SHOP
230 Steinwehr Avenue
Phone ED 4-5715

TONIGHT'S MOVIES

MONDAY EVENING
6:00—(13) "Stranger on Horseback" —Joel McCrea.
11:00—(5) "The Master Race"—Nancy Gates, George Coulouris.
(13) "Lady Be Good" — Ann Sothern, Robert Young.
11:20—(2) "Three Is A Family" — Charles Ruggles.

TUESDAY MORNING
10:00—(5) "Big Shot"—Guy Kibbee, Cora Witherspoon.
12:30—(13) "The Half-breed"—Robert Young, Reed Hadley.
1:00—(5) "Blackbeard the Pirate" — Robert Newton, Maureen O'Hara.
(9) "Sundown."

Here's your answer!
A DEPENDABLE, LOW-MILEAGE, SAFETY-TESTED TRADE-IN!

	NOW
1959 Austin 4-dr., H.	$1295
1959 Fiat 600 Sdn., H.	1095
1958 Ford 2-dr., R.&H.	1495
1957 Oldsmobile Station Wagon, Power	1895
1956 Oldsmobile Super 4-dr., Power	1395
1956 Ford 4-dr., R.&H.	995

Many More to Choose From

1960 Chev. Impala cpe.
1960 Valiant
1959 Mercury Monterey
1959 Fiat 1500 4-dr. H
1959 Fiat 600 sdn. H
1959 GMC 1/2 ton pickup Fleetside
1958 Oldsmobile 88 Holiday cpe.
1958 Cadillac Series 62 cpe., power
1958 Ford Fairlane 500 2-dr
1958 Ford 4-dr HT
1958 Olds 88 4-dr., R&H
1958 Pontiac Star Chief 4-dr., power
1958 Ford Victoria, power
1958 Cadillac Cpe. DeVille, power
1958 Cadillac 4-dr. sdn., power
1958 Olds Super 88 Station Wgn.
1957 Cadillac Coupe DeVille
1957 Ford 2-dr HT
1957 Chev 4-dr. V-8
1957 Olds Super 88 sdn., power
1957 Chevrolet 2-dr.
1957 Cadillac Fleetwood, blue
1957 Dodge V-8 4-dr
1957 Oldsmobile Station Wagon, power
1957 Chevrolet Station Wagon
1956 Mercury Montclair
1956 Cadillac 62 sdn., power
1956 Pontiac 4-dr Wagon
1956 Ford Sunliner, R&H
1956 Oldsmobile Super 88 4-dr.
1956 Ford 4-dr R&H
1955 Cadillac cpe., power
1955 Olds Super 88 cpe., R&H
1955 Olds Super 4-dr Holiday power
1955 Pontiac Catalina cpe., power
1954 Plymouth 4-dr.
1954 Olds 88 2-dr R&H
1953 Olds 98 Holiday cpe
1953 Chevrolet 2-dr.
1953 Packard 2-dr.
1950 Pontiac 2-dr.

We Finance Our Own Cars
GLENN L. BREAM, INC.
Paul R. Knox, Mgr.
OLDSMOBILE, CADILLAC and GMC SALES and SERVICE
100 Buford Ave. Gettysburg, Pa.
Open Evenings Until 9 P.M. Phone ED 4-1171
GET A QUALITY DEAL FROM A QUALITY DEALER

Blessed event for budgets
FORD'S ECONOMY TWINS FOR 1960
The Economy Choice of a lifetime – Two new Fords . . . Two new low-price fields . . .
Two wonderful new ways to go "The Finest"

THE 1960 FORD FALCON
Now there's both a new economy size Ford and a large economy-size Ford.
The new economy size is the Ford Falcon—America's lowest-priced 6-passenger car. It's up to $124 less than other 6-passenger cars in the compact field.* It goes up to 30 miles on a gallon of regular gas. Servicing is easy and repair costs are low. You can even save up to 15% on your insurance.
And the Falcon is the one American compact car that is thoroughly proved for American driving. There's room for 6 people—luggage and all.
*based upon a comparison of manufacturers' suggested retail delivered prices

THE 1960 FORD FAIRLANE 500
Now consider the large economy-size Ford, the Fairlane 500. Here is the most car per dollar ever built.
The Fairlane 500 brings you fine-car styling, luxury and comfort, yet it offers Falcon economies like regular gas, 4,000-mile oil changes, double-life aluminized mufflers, and no more waxing. Like the Falcon, too, it brings you big price news: $142 less than last year's popular Fairlane 500!
Come see, come save, come pick the Ford economy twin that saves and serves you best. Visiting hours as usual at your Ford Dealer's.
FORD DIVISION, Ford Motor Company

See "FORD STARTIME," TV's finest hour, in living color Tuesdays on NBC-TV

Economy choice of a lifetime in the wonderful New World of '60
FORDS

A WONDERFUL NEW WORLD OF FORDS FOR '60 — FORD—The Friend Family of a Lifetime — FALCON—The New-size Ford — THUNDERBIRD—The World's Most Wanted Car

ADAMS COUNTY MOTORS, INC.
YORK AND LIBERTY STS. PHONE ED 4-1101 GETTYSBURG, PA.

NewspaperARCHIVE.com